SKILLING - HELLE - CHRISTIANSEN - ROBERTSON Structural & Civil Engineers

PROJECT THE WORLD TRADE CENTER | TITLE CONNECTION DETAIL 766 A & B | DATE 8-14-67

REVISIONS

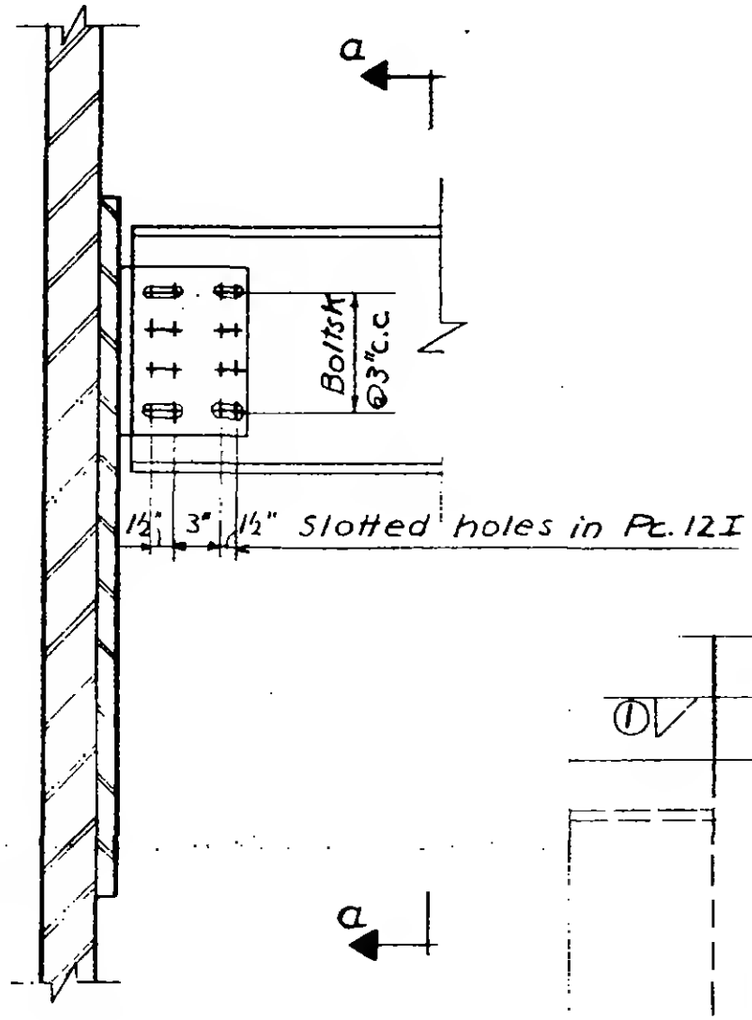

Elevation

SCHEDULE		
	766 A	766 B
BOLTS		
K	8 - ⅞"ϕ	8 - 1"ϕ
WELDS		
①	5/16	5/16

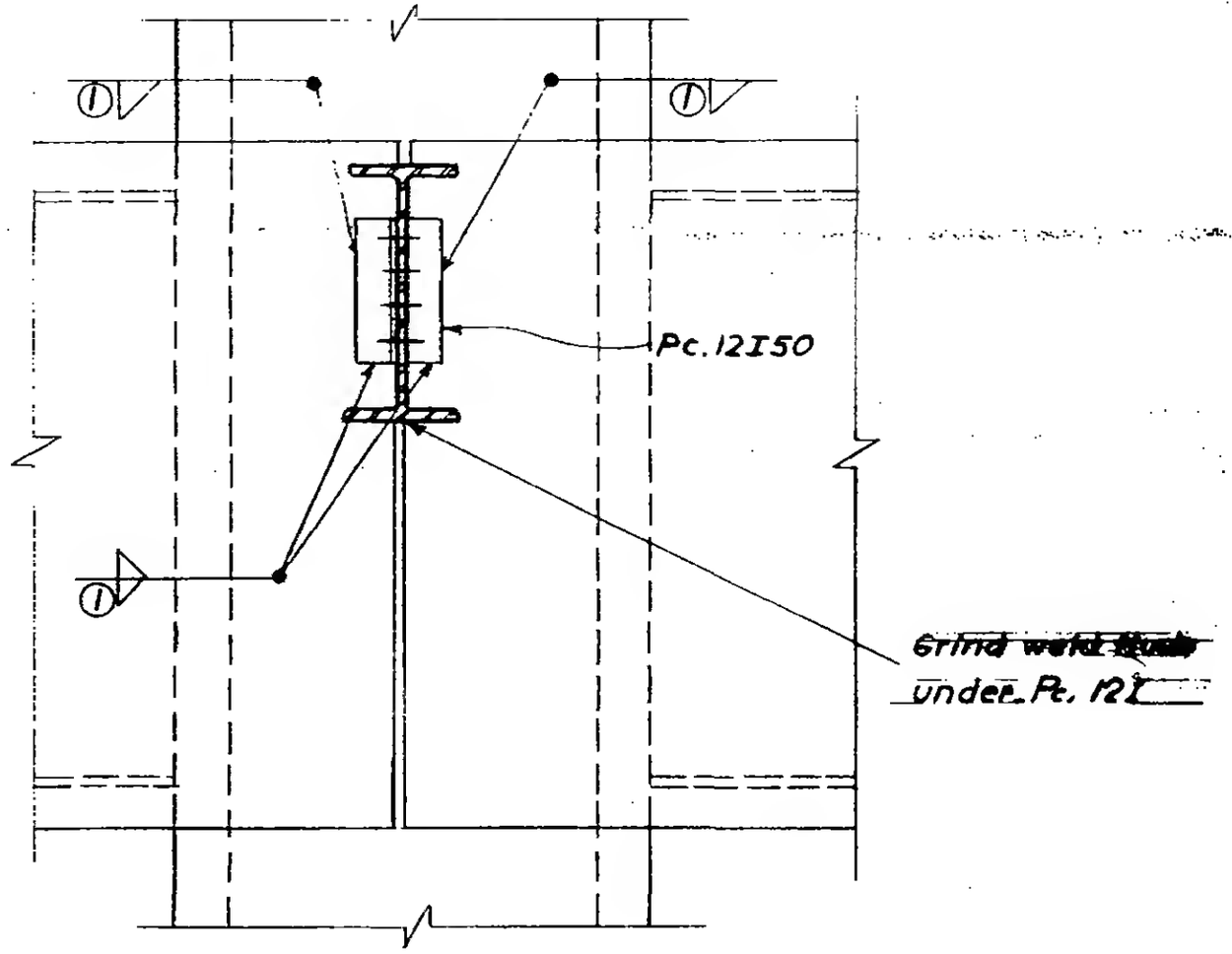

Section a-a

LICENSED PROFESSIONAL ENGINEER
LESLIE E. ROBERTSON
No. 34360
UNIVERSITY OF THE STATE OF NEW YORK

6-AB1-1