SKILLING - HELLE - CHRISTIANSEN - ROBERTSON Structural & Civil Engineers

PROJECT THE WORLD TRADE CENTER | TITLE CONNECTION DETAIL 775 A-C | DATE 2-9-68

REVISIONS

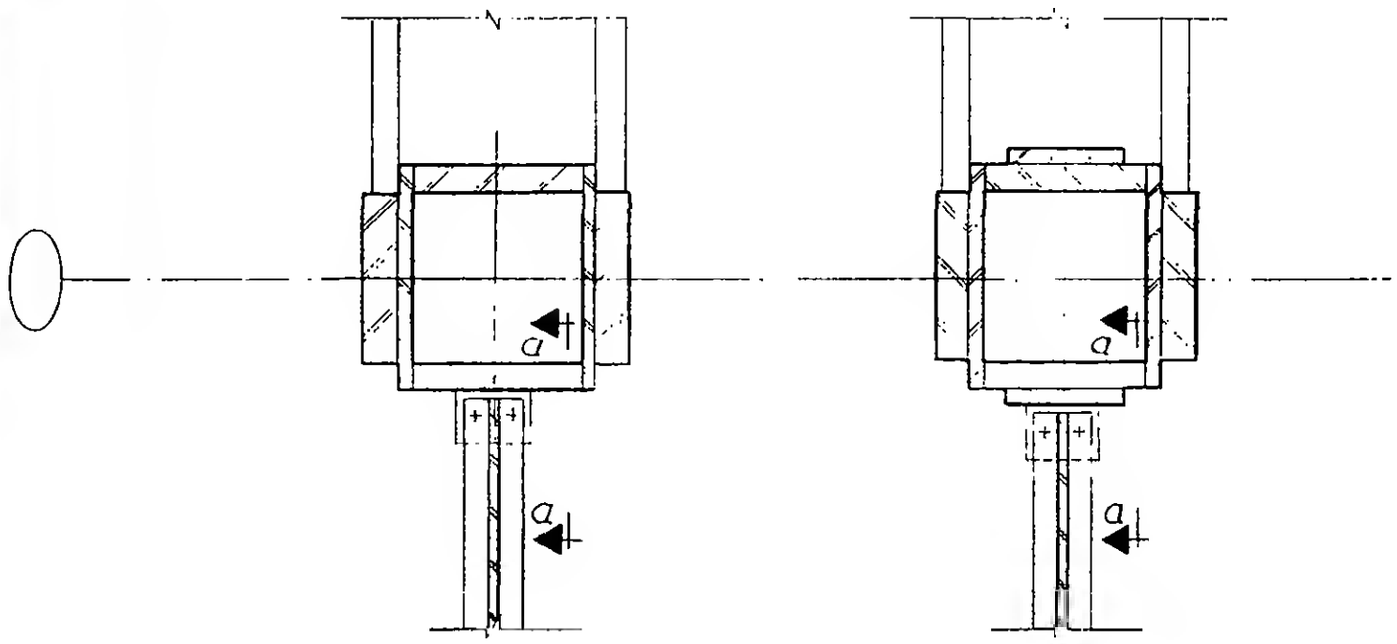

Plan
Detail 775A

Plan
Detail 775 B&C

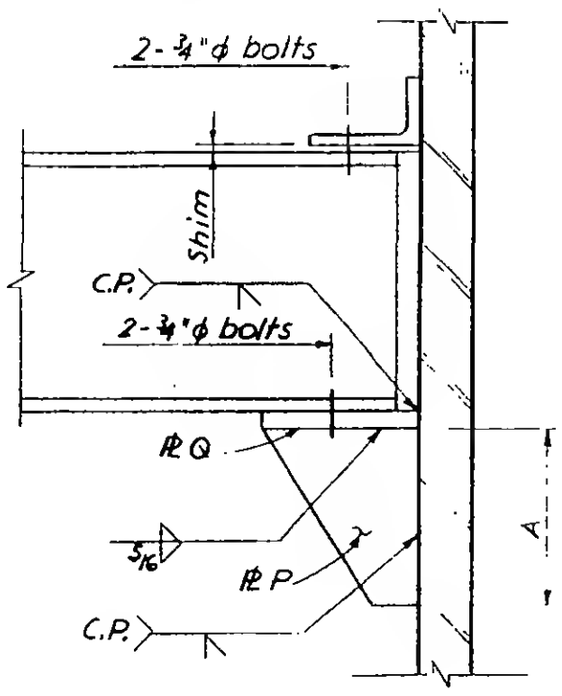

Section a-a

SCHEDULE			
	775 A	775 B	775C
PLATE P	4½" × ¾"	7" × 1"	7" × 1"
PLATE Q	¾"	1"	1"
DIM. A	1'-2"	1'-2"	1'-2"

6-AB1-264