SKILLING - HELLE - CHRISTIANSEN - ROBERTSON Structural & Civil Engineers

PROJECT THE WORLD TRADE CENTER | TITLE CONNECTION DETAIL 781 A & B | DATE 2-9-68

REVISIONS

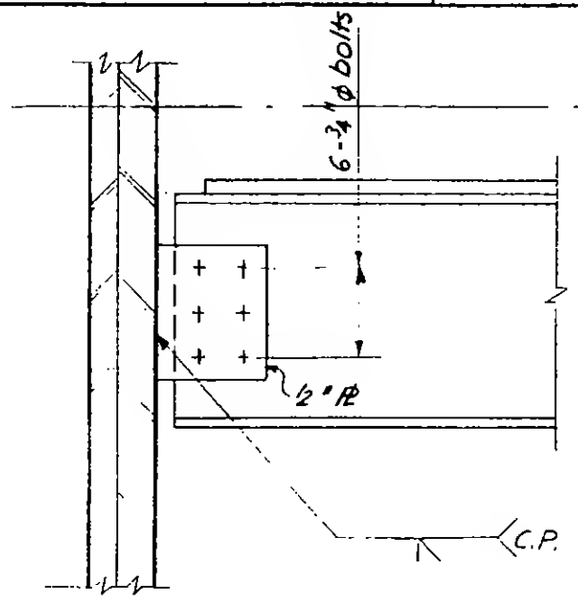

Section b-b
Detail 781 A

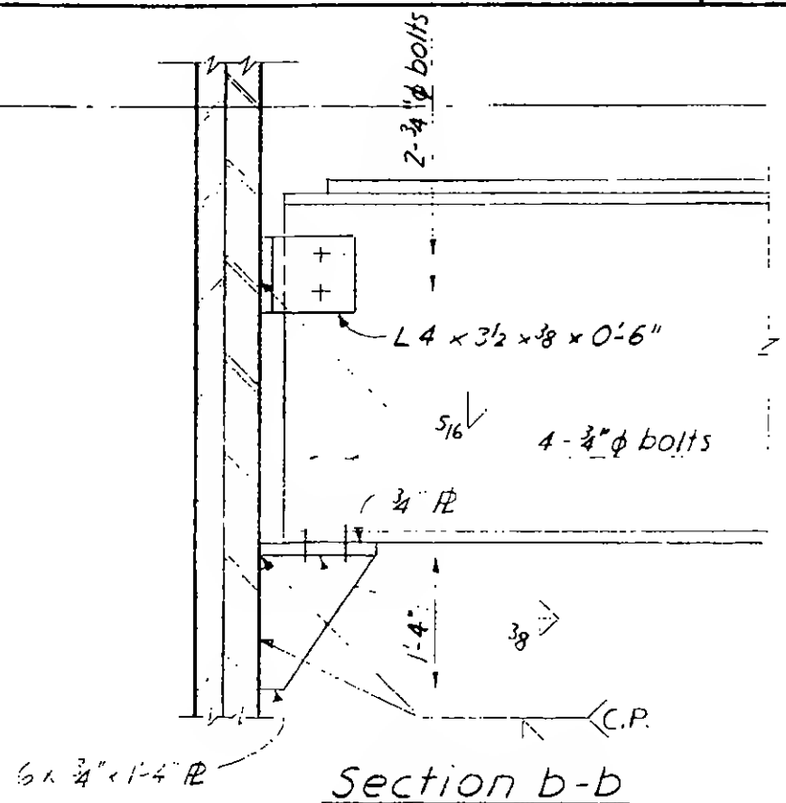

Section b-b
Detail 781 B

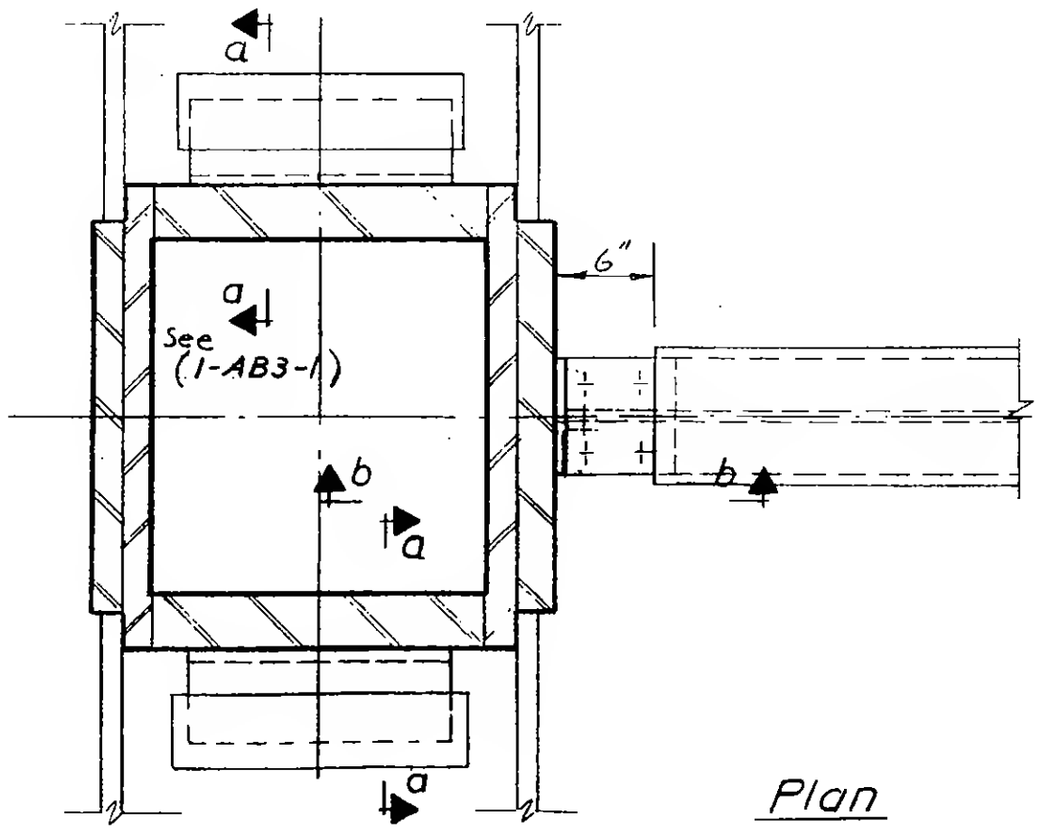

Plan

6-AB1-270