SKILLING - HELLE - CHRISTIANSEN - ROBERTSON Structural & Civil Engineers

PROJECT THE WORLD TRADE CENTER | TITLE CONNECTION DETAIL 783 A | DATE 2-9-68

REVISIONS

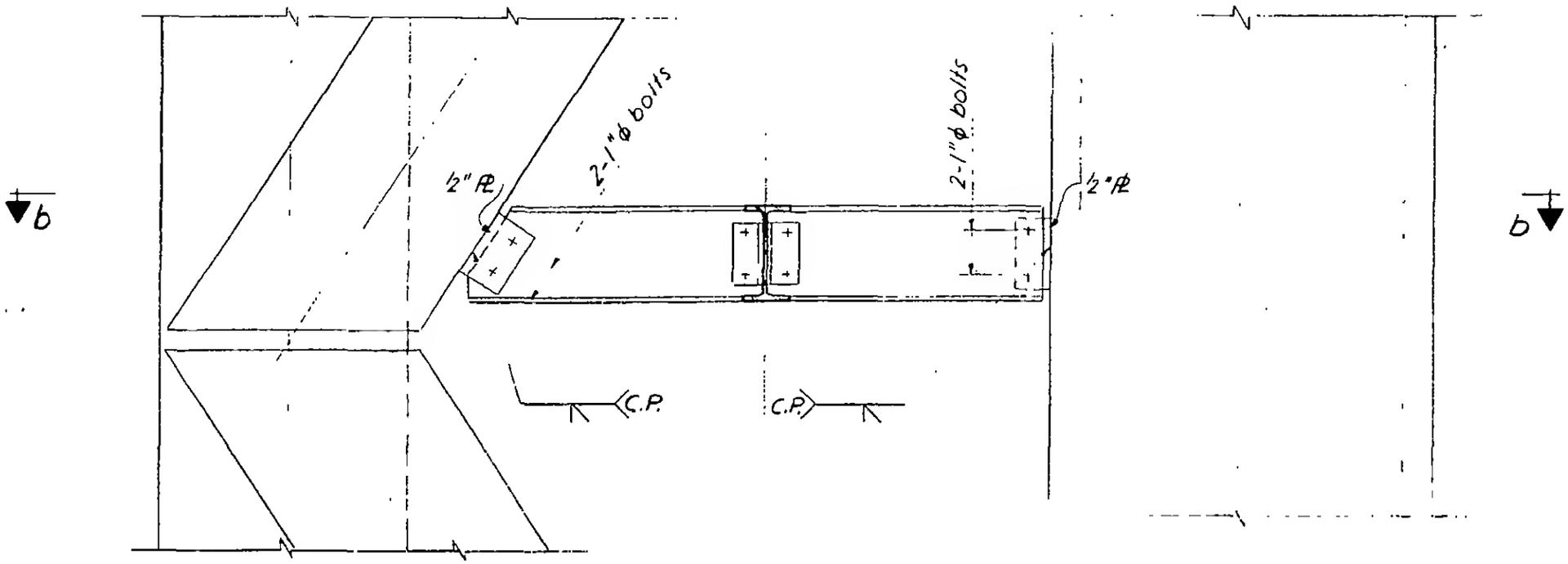

Section a-a

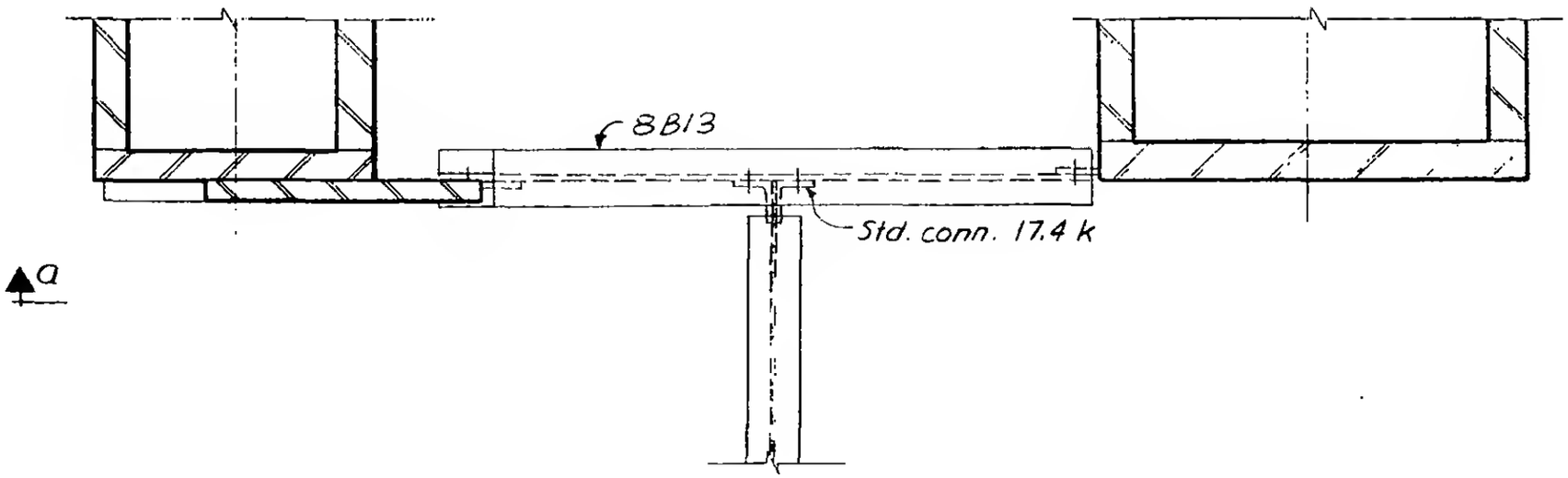

Plan b-b

6 -AB1-272