SKILLING - HELLE - CHRISTIANSEN - ROBERTSON Structural & Civil Engineers

PROJECT THE WORLD TRADE CENTER | TITLE CONNECTION DETAIL 802 B | DATE 8.14.67

REVISIONS

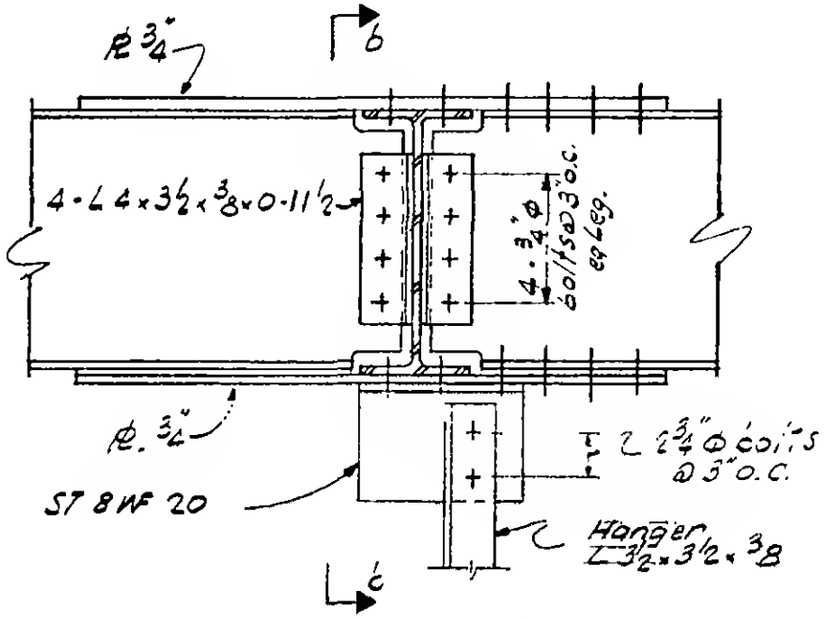

Section a-a

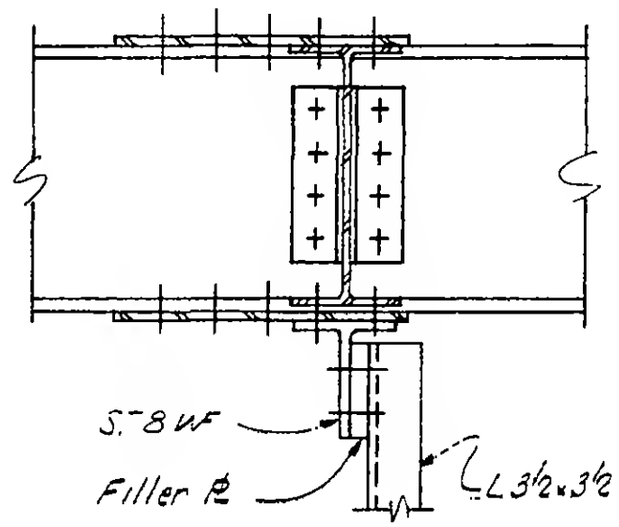

Section b-b

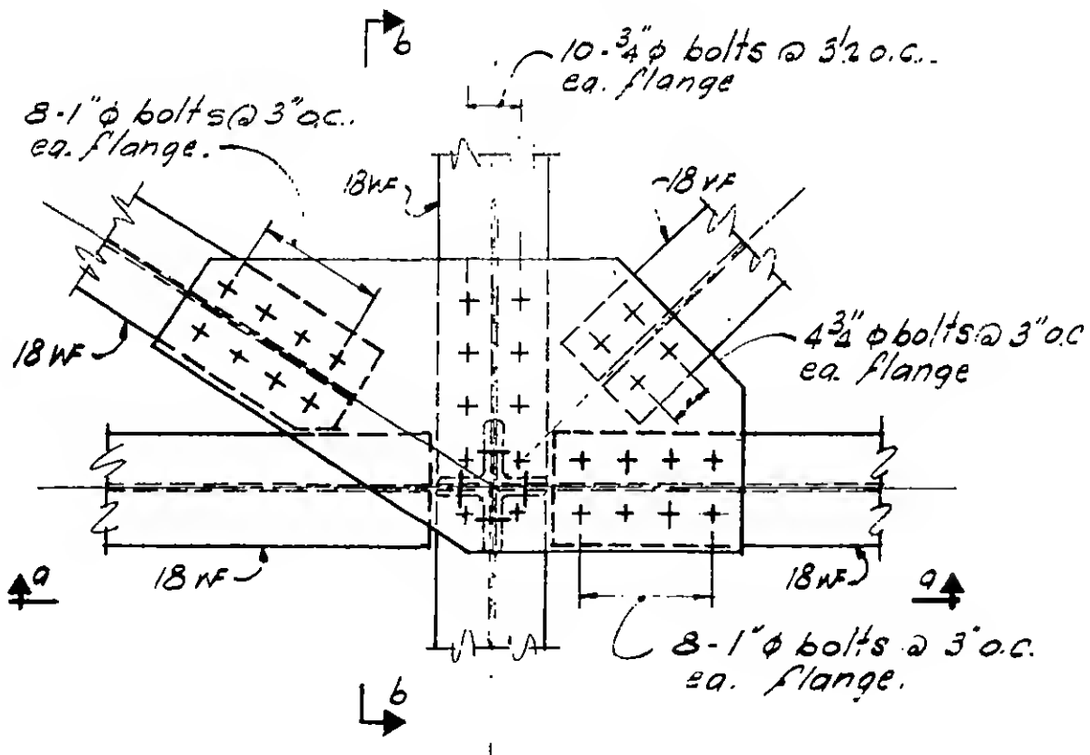

PLAN

LICENSED PROFESSIONAL ENGINEER LESLIE E. ROBERTSON No. 34360 THE STATE OF NEW YORK

6-AB1-308.1