WORTHINGTON, SKILLING, HELLE & JACKSON — Civil & Structural Engineers

PROJECT THE WORLD TRADE CENTER | TITLE CONNECTION DETAIL 805 A | DATE 6-19-67

REVISIONS

8.14.67

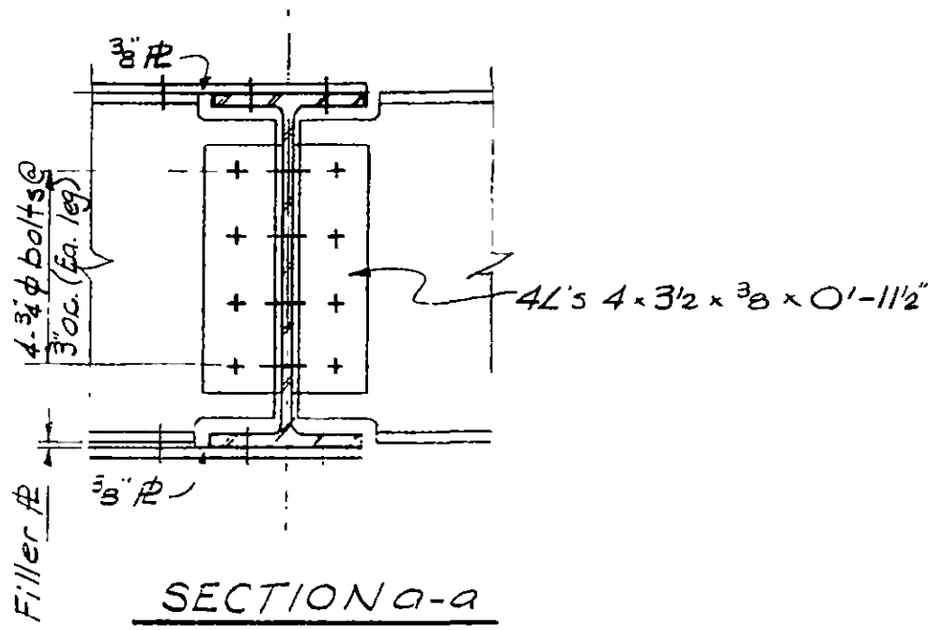

SECTION a-a

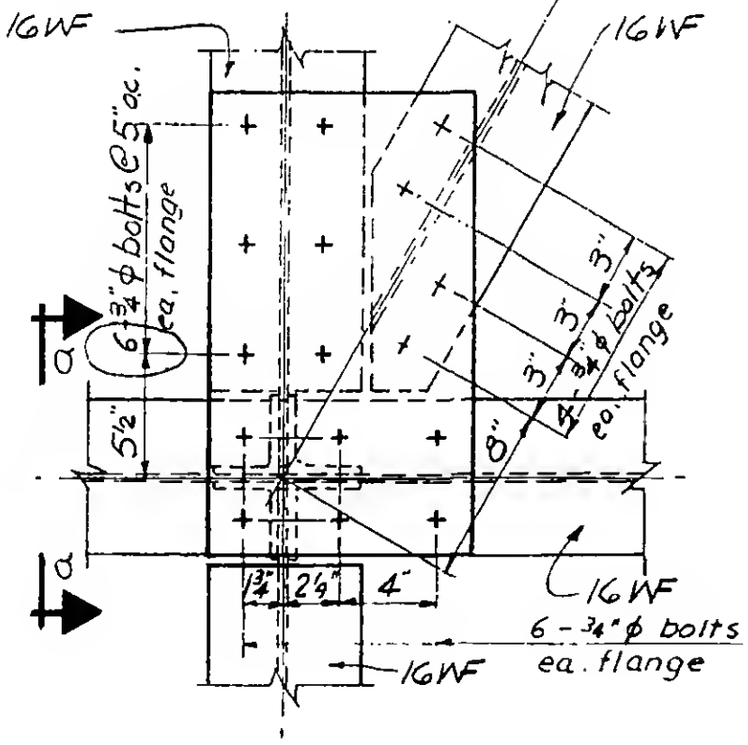

PLAN

LICENSED PROFESSIONAL ENGINEER — LESLIE E. ROBERTSON — No. 34360 — UNIVERSITY OF THE STATE OF NEW YORK

G-AB1-311