WORTHINGTON, SKILLING, HELLE & JACKSON — Civil & Structural Engineers

PROJECT: THE WORLD TRADE CENTER | TITLE: CONNECTION DETAIL 806 A & C | DATE: 6-19-67

REVISIONS
8-14-67
9-29-67

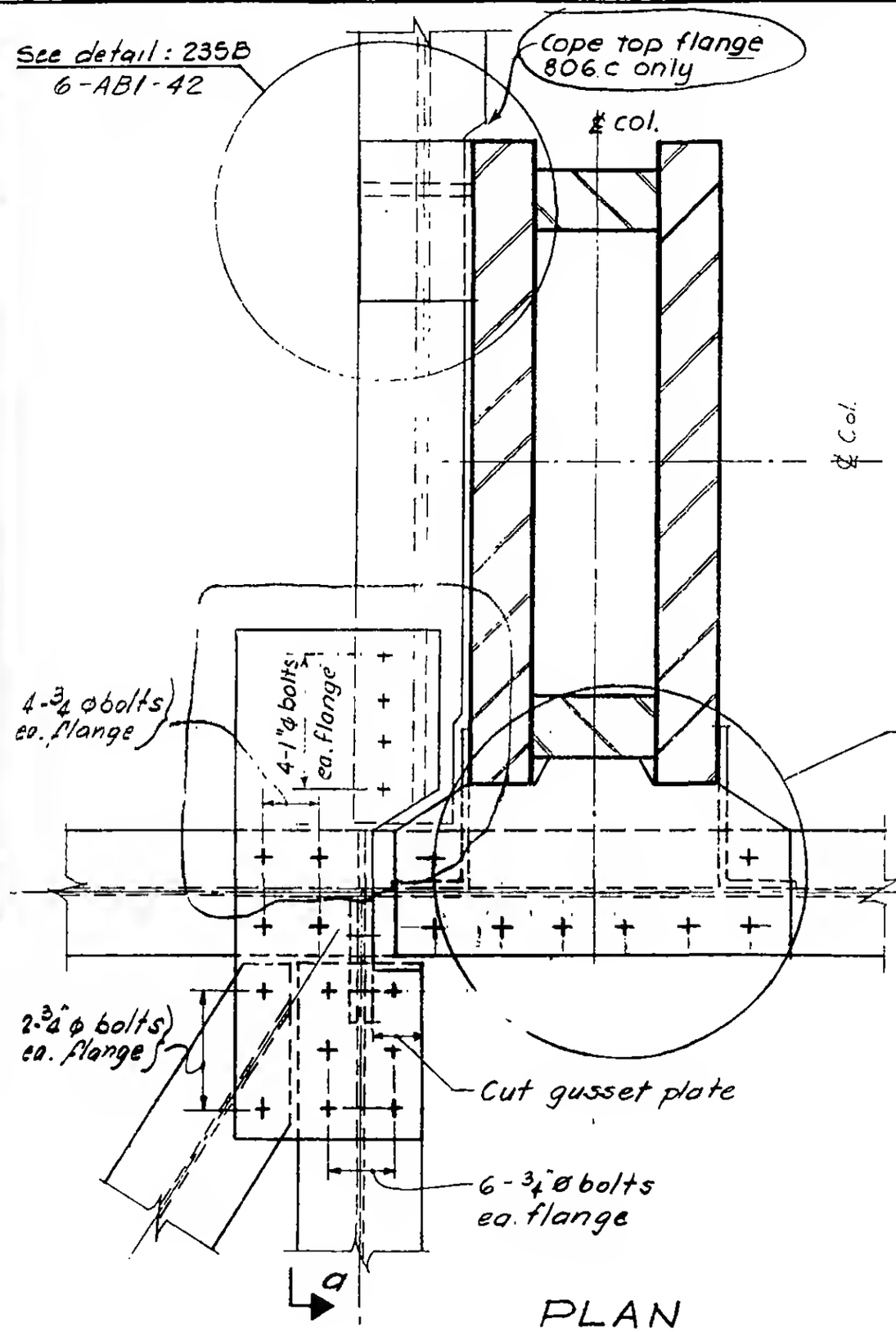

PLAN

Note:
Detail 806 A - All beams 16 WF
Detail 806 C - All beams 18 WF

See detail : 205 H, 6-AB1-9.4
812 A, 6-AB5-10
813 A, 6-AB5-11

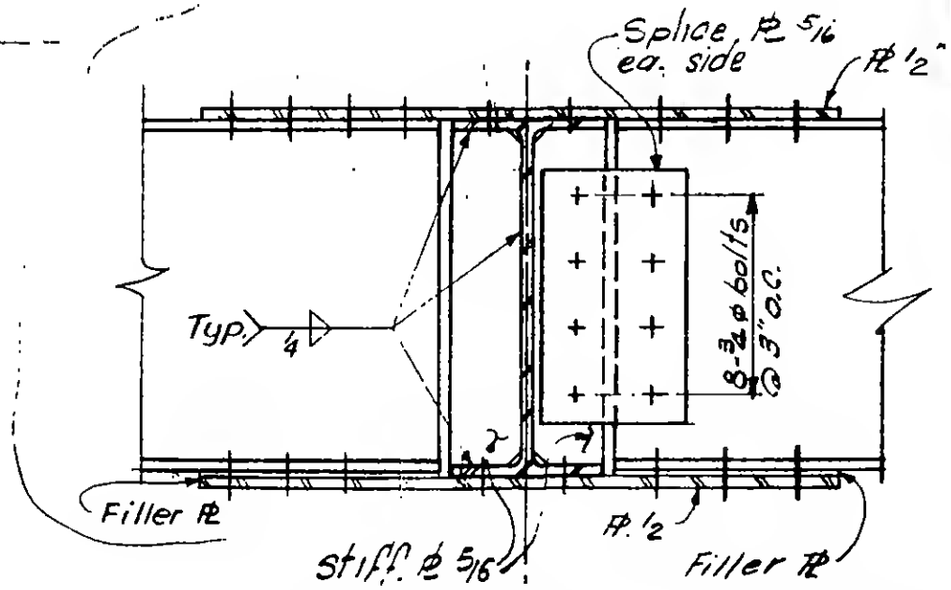

SECTION a-a

G-AB1-312

LICENSED PROFESSIONAL ENGINEER
LESLIE E. ROBERTSON
No. 34360
STATE OF NEW YORK