WORTHINGTON, SKILLING, HELLE & JACKSON — Civil & Structural Engineers

PROJECT: THE WORLD TRADE CENTER | TITLE: CONNECTION DETAIL: 807A & 807B | DATE: 6-19-67

REVISIONS

8-14-67

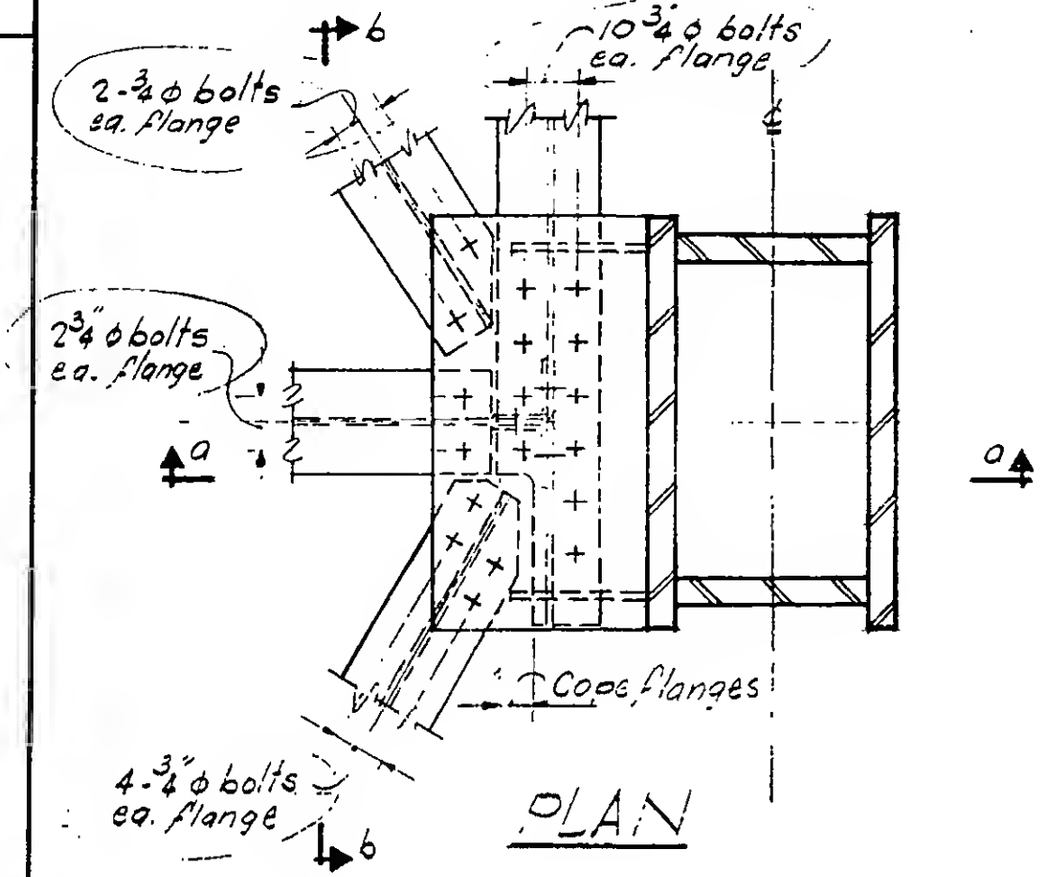

PLAN

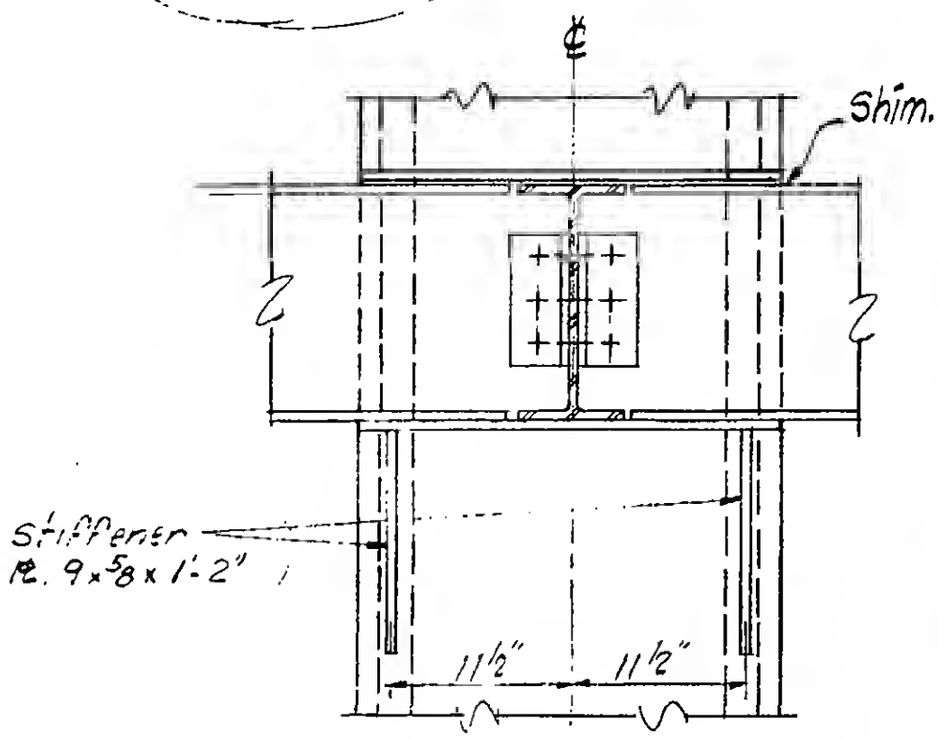

Section 6-6

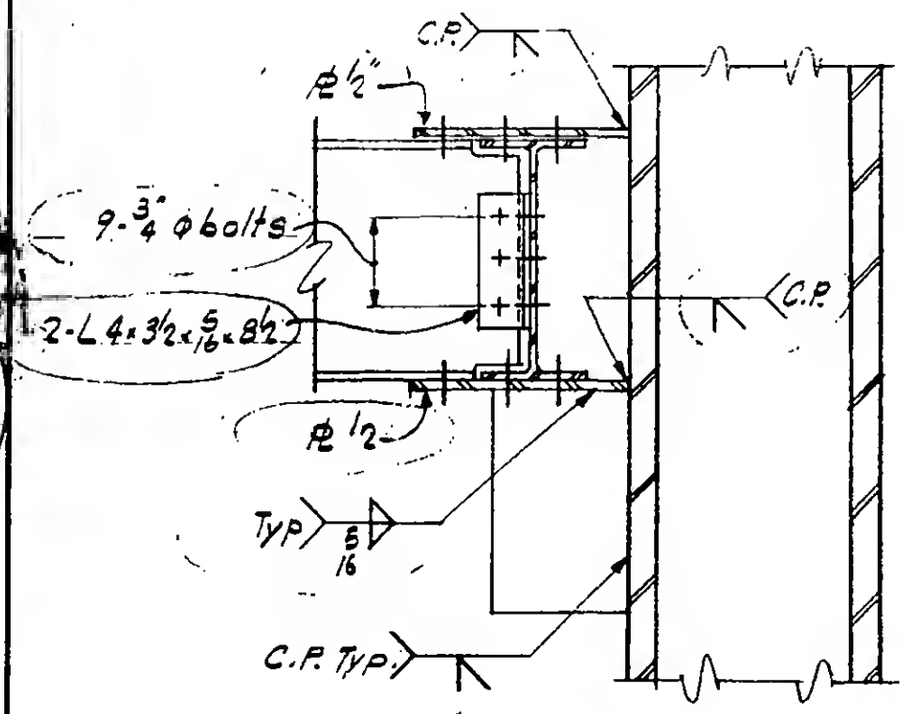

Section a-a

Note:
All beams 16 WF in Det. 807A
All beams 18 WF in Det. 807B

REGISTERED PROFESSIONAL ENGINEER
No. 34360
UNIVERSITY OF THE STATE OF NEW YORK

6-AB1-3/3