SKILLING - HELLE - CHRISTIANSEN - ROBERTSON Structural & Civil Engineers

PROJECT THE WORLD TRADE CENTER | TITLE CONNECTION DETAIL 101 B, D | DATE 3-14-67

REVISIONS

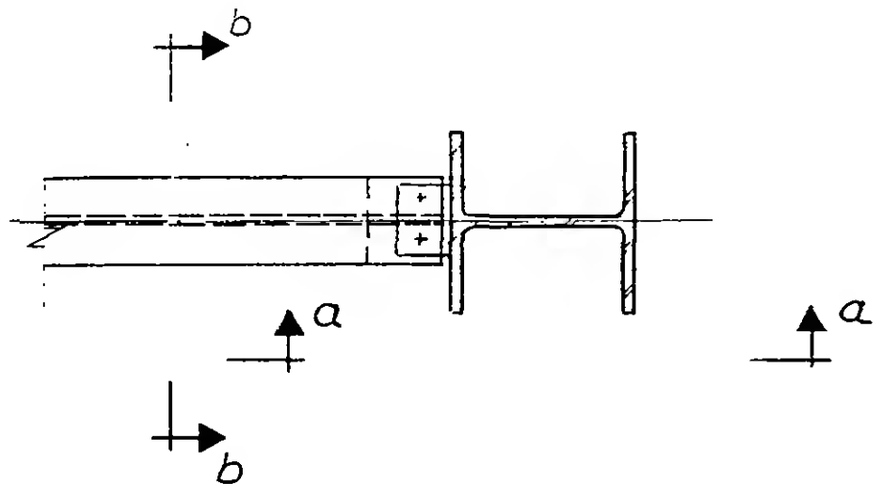

Plan

SCHEDULE			
DETAIL	BEAM SIZE	PL (")	A (")
101 B	10 WF 21 to 10 WF 72	1/2	0'-6"
	10 WF 77 to 10 WF 100	5/8	0'-9"
	12 WF 27 to 12 WF 50	1/2	0'-8"
	12 WF 53 to 12 WF 72	1/2	0'-10"
	12 WF 79 to 12 WF 106	5/8	1'-2"
101 D	12 WF 65 to 12 WF 106	5/8	1'-4"

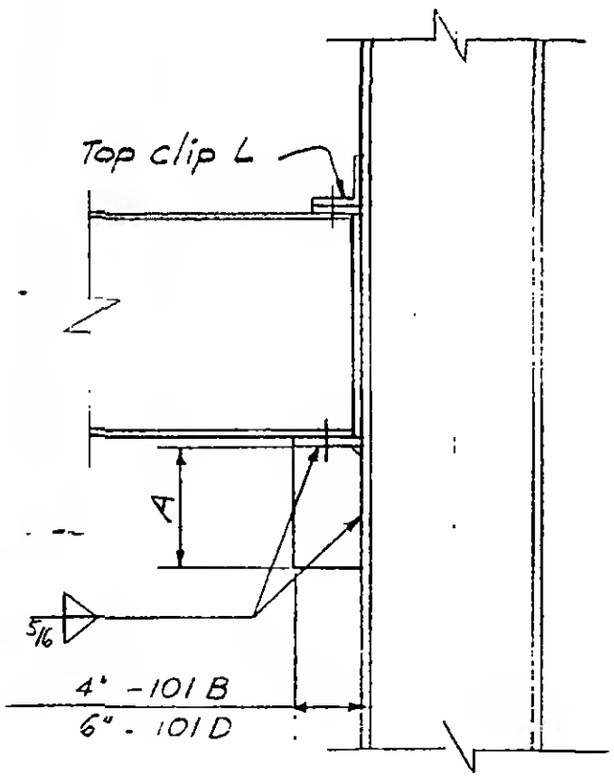

Section a-a

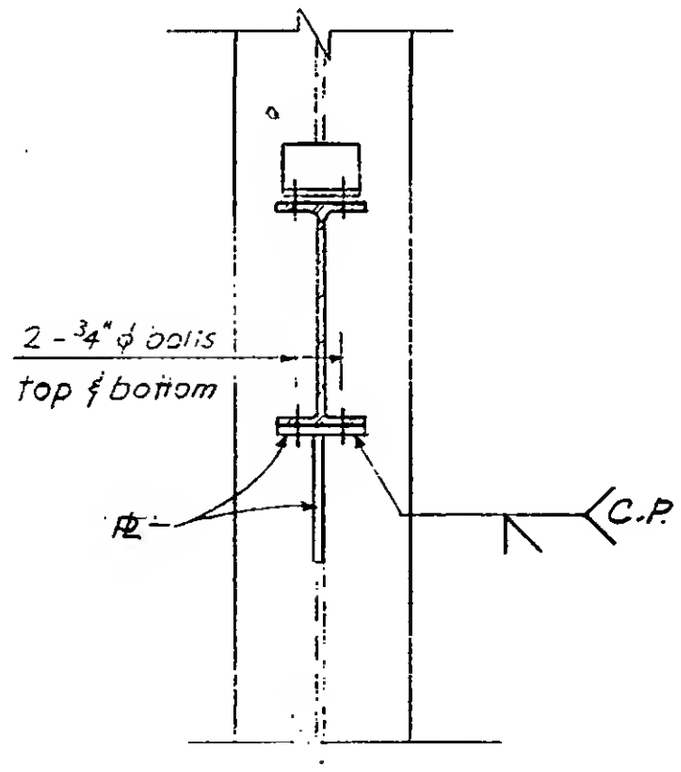

Section b-b

LICENSED PROFESSIONAL ENGINEER
LESLIE E. ROBERTSON
No. 34360
UNIVERSITY OF THE STATE OF NEW YORK

6-AB2-2.1