SKILLING - HELLE - CHRISTIANSEN - ROBERTSON Structural & Civil Engineers

PROJECT THE WORLD TRADE CENTER | TITLE CONNECTION DETAIL 102 B | DATE 8-14-67

REVISIONS

2-9-68

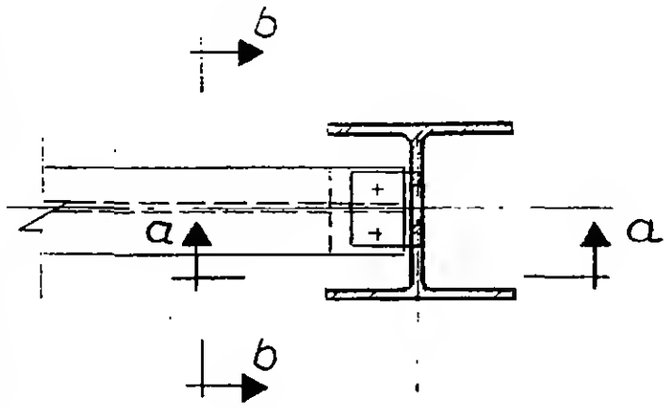

Plan

SCHEDULE			
BEAM SIZE	PL (")	A (")	WELD 1
10 WF 21 to 10 WF 72	1/2	0'-6"	5/16
10 WF 77 to 10 WF 100	5/8	0'-9"	5/16
12 WF 27 to 12 WF 50	1/2	0'-8"	5/16
12 WF 53 to 12 WF 72	1/2	0'-10"	5/16
12 WF 79 to 12 WF 106	5/8	1'-2"	5/16
12 WF 120 to 12 WF 190	3/4	1'-6"	3/8

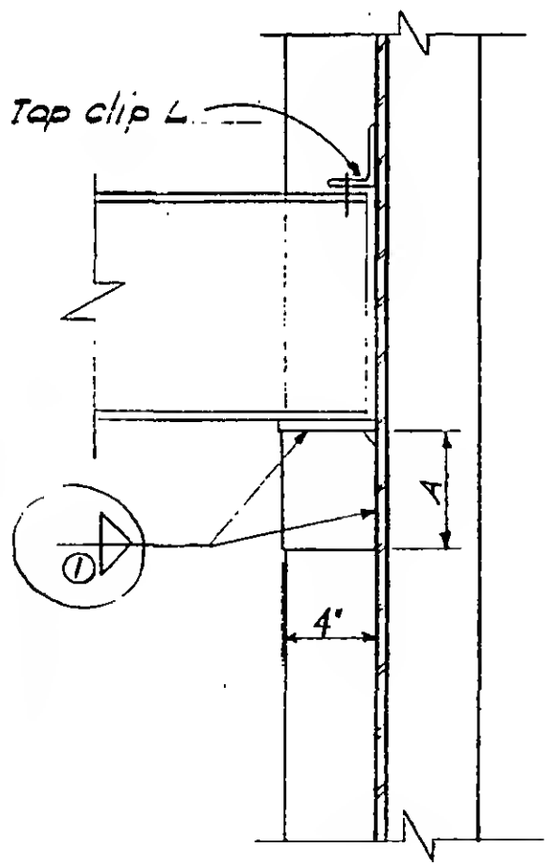

Section a-a

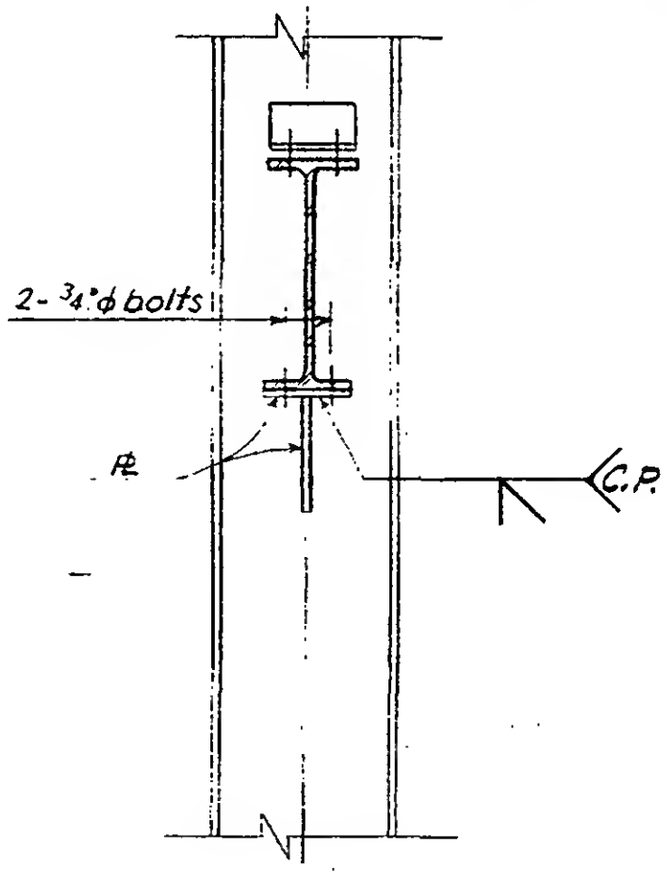

Section b-b

LICENSED PROFESSIONAL ENGINEER
LESLIE E. ROBERTSON
No. 34360
UNIVERSITY OF THE STATE OF NEW YORK

6-AB2-31