SKILLING - HELLE - CHRISTIANSEN - ROBERTSON Structural & Civil Engineers

PROJECT THE WORLD TRADE CENTER | TITLE CONNECTION DETAIL 102 C | DATE 3-14-67

REVISIONS

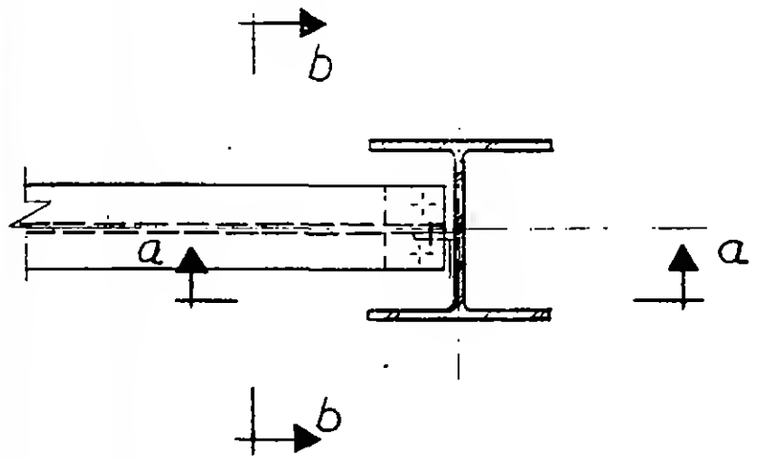

Plan

SCHEDULE		
BEAM SIZE	A	B
10 WF	0'-6"	0'-4"
12WF, 14WF, 16WF	0'-9"	0'-4"
21 WF	0'-10"	0'-6"
24 WF	1'-4"	0'-6"

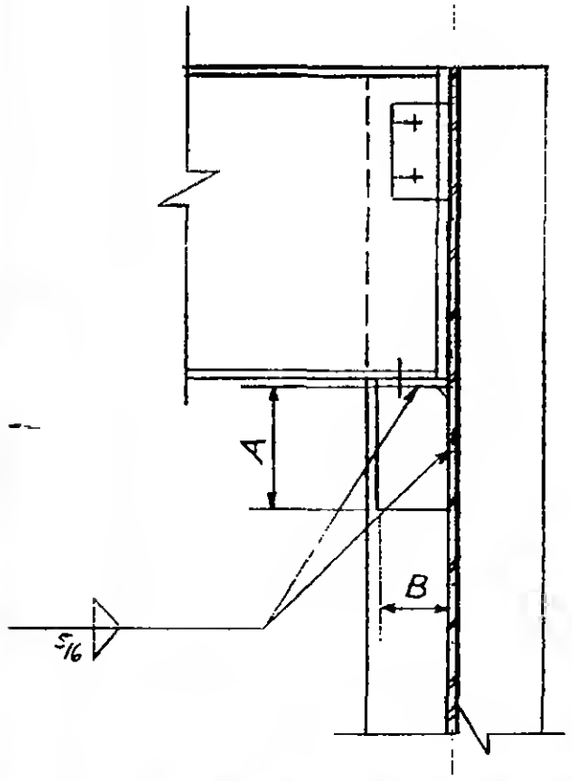

Section a-a

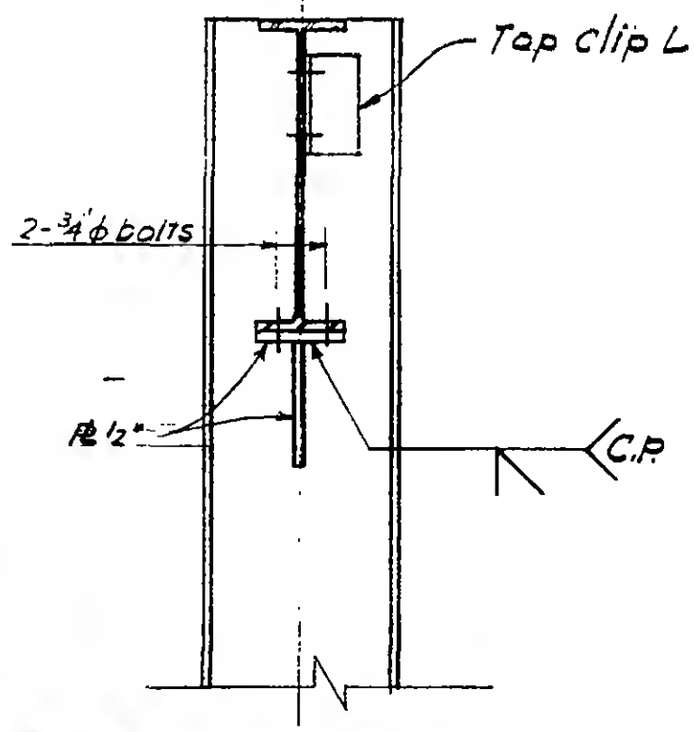

Section b-b

LICENSED PROFESSIONAL ENGINEER LESLIE E. ROBERTSON No. 34360 UNIVERSITY OF THE STATE OF NEW YORK

6-AB2-3.2