WORTHINGTON, SKILLING, HELLE & JACKSON — Civil & Structural Engineers

PROJECT: THE WORLD TRADE CENTER | TITLE: CONNECTION DETAIL 105 C D,F,K,M | DATE: 7-28-67

REVISIONS
9-15-67
9-18-67
12-13-67
12-21-67

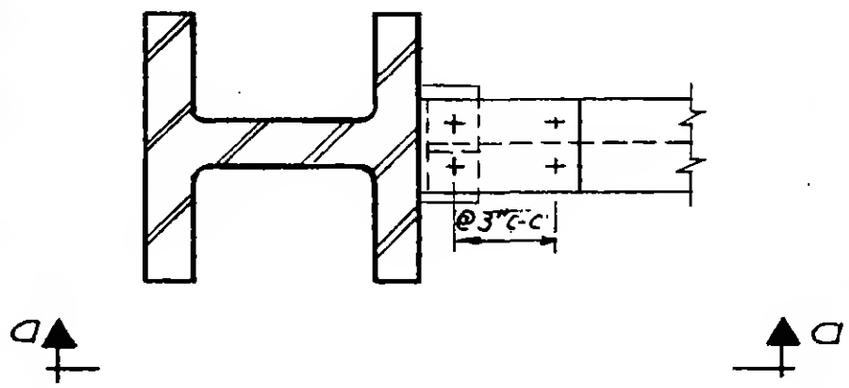

Plan
105 F, & M

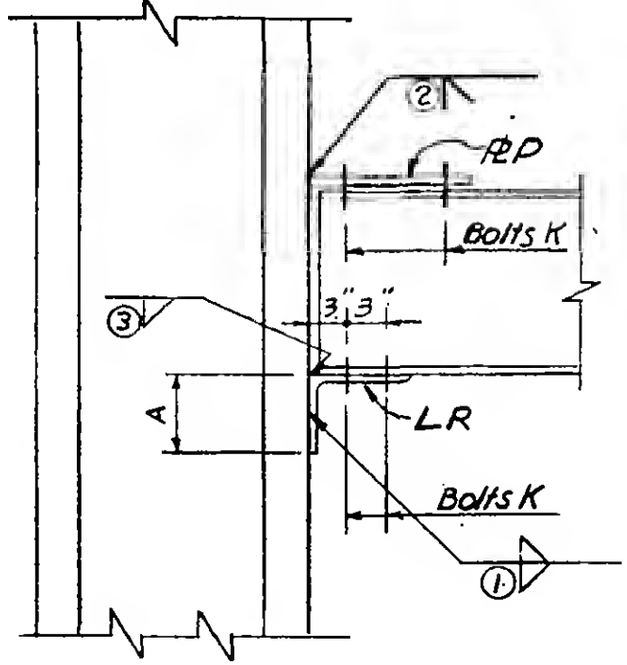

Section a-a

6-AB2-7.4 for Schedule 105 C, D & F
6-AB2-7.5 for Schedule 105 K & M

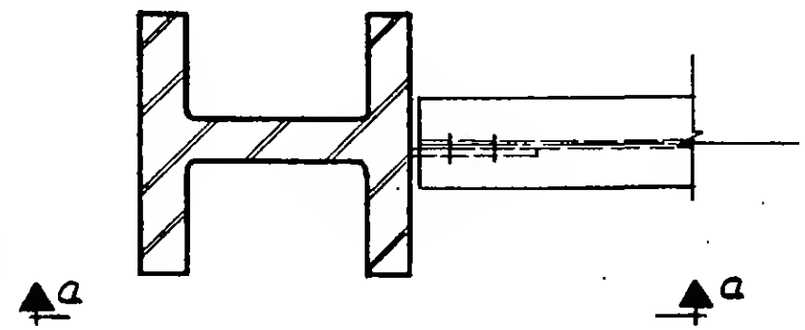

Plan
105 C, D & K

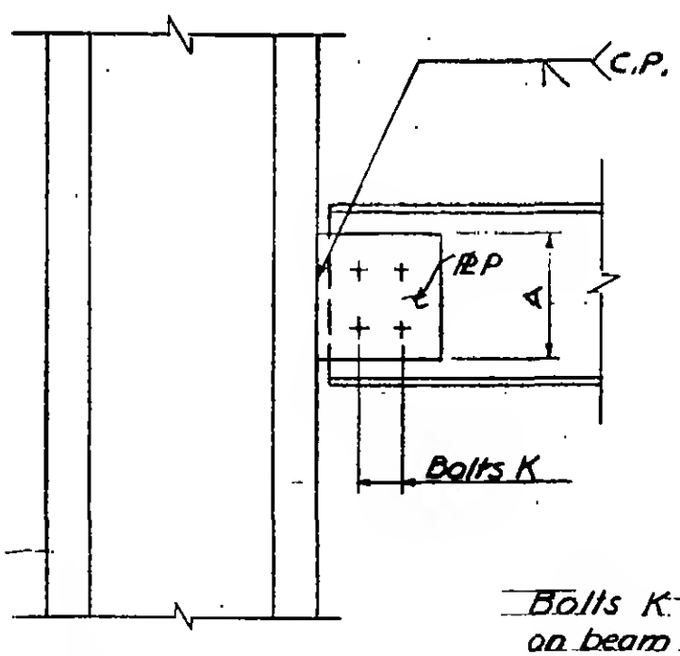

Bolts K w/washers on beam web.

Section a-a

Note:
Use alt. for all scheduled Details, floor 10 and above.

6-AB2-[illegible]

LICENSED PROFESSIONAL ENGINEER
LESLIE E. ROBERTSON
No. 34360
UNIVERSITY OF THE STATE OF NEW YORK