SKILLING - HELLE - CHRISTIANSEN - ROBERTSON Structural & Civil Engineers

PROJECT THE WORLD TRADE CENTER | TITLE CONNECTION DETAIL 107A | DATE 2-9-68

REVISIONS

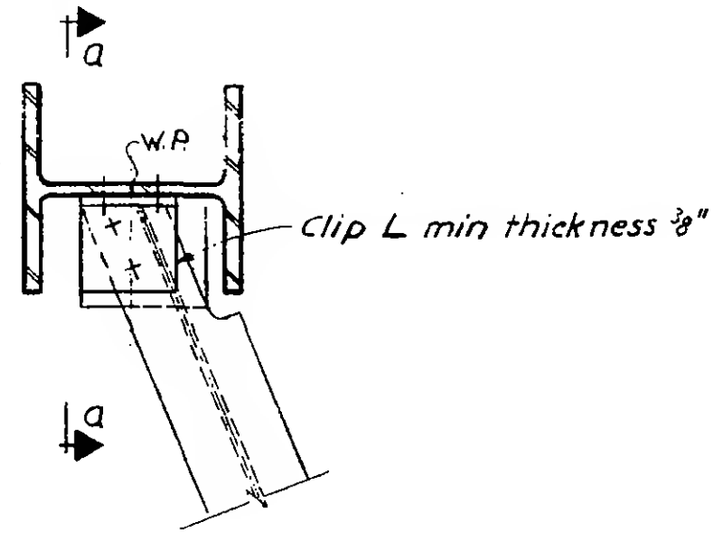

Plan

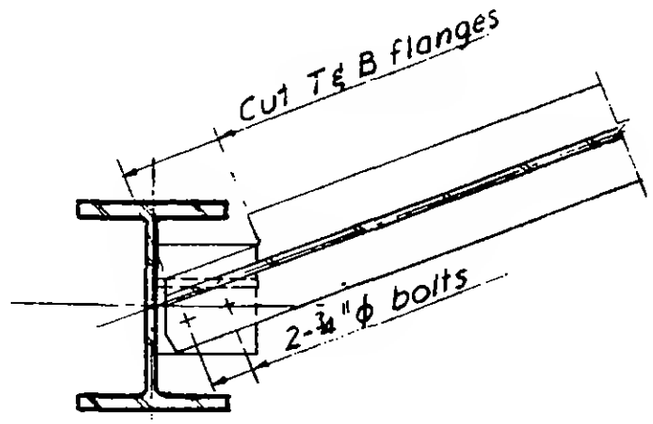

Section b-b

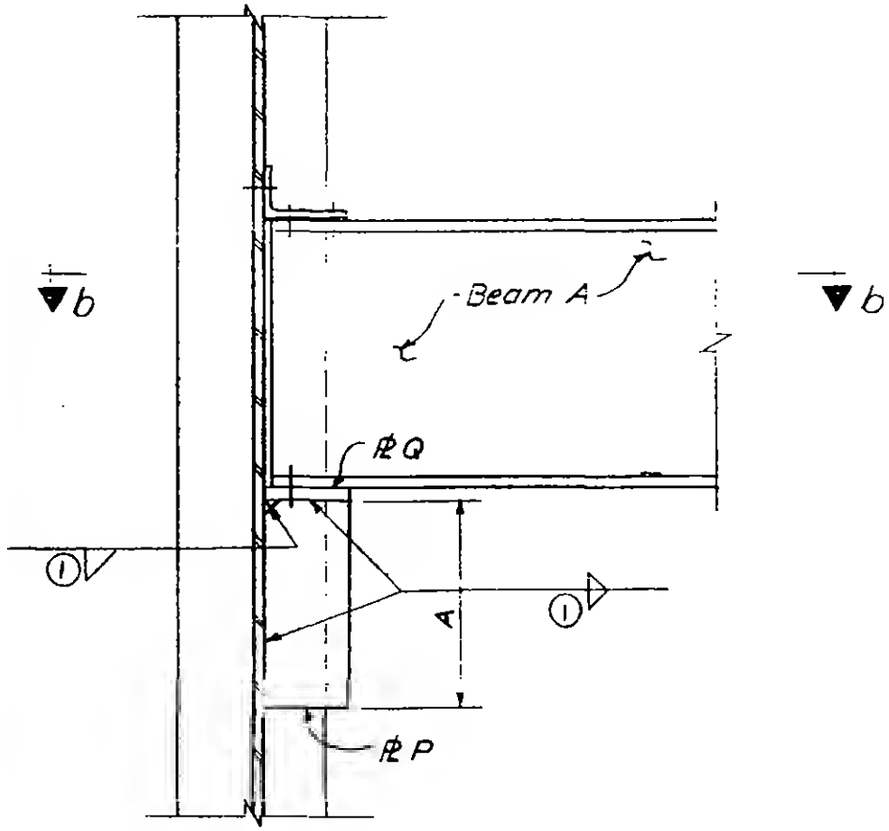

Section a-a

SCHEDULE				
BEAM A	DIM. A	℄ P	℄ Q	WELD ①
10WF	0'-9"	⅝"	¾"	⅜
12WF31, 40	1'-0"	⅝"	¾"	⅜
12 WF 50	1'-1"	⅝"	¾"	⅜
12 WF 53	1'-0"	⅝"	¾"	⅜
12 WF 92	1'-4"	⅝"	¾"	⅜
16 WF 78	1'-2"	⅝"	¾"	⅜
24 WF 84	1'-8"	¾"	1"	⅜

LICENSED PROFESSIONAL ENGINEER LESLIE E. ROBERTSON No. 34360 UNIVERSITY OF THE STATE OF NEW YORK

6-AB2-9