SKILLING - HELLE - CHRISTIANSEN - ROBERTSON Structural & Civil Engineers

PROJECT THE WORLD TRADE CENTER | TITLE CONNECTION DETAIL 109 A | DATE 2-9-68

REVISIONS

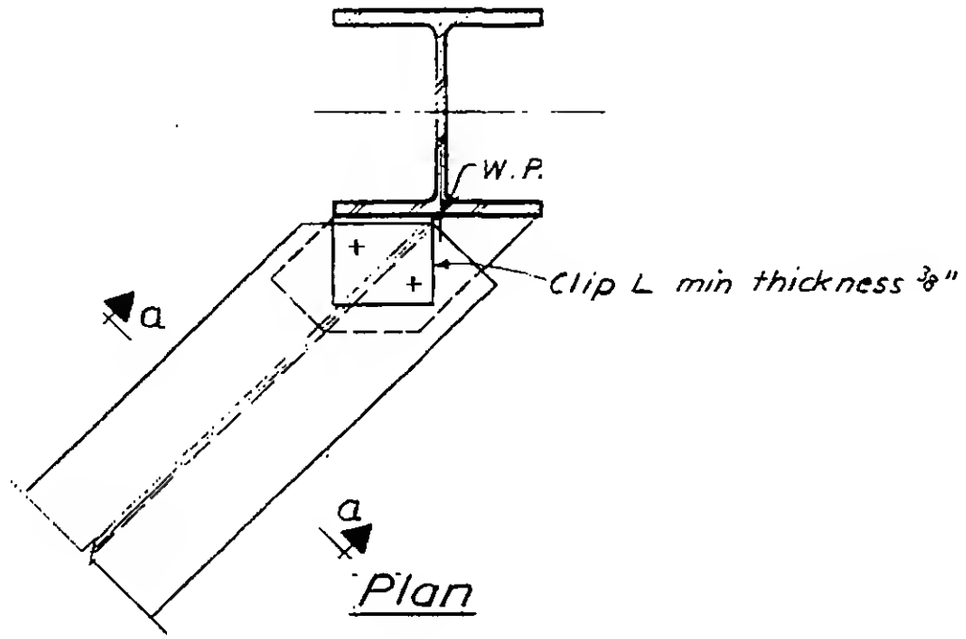

Plan

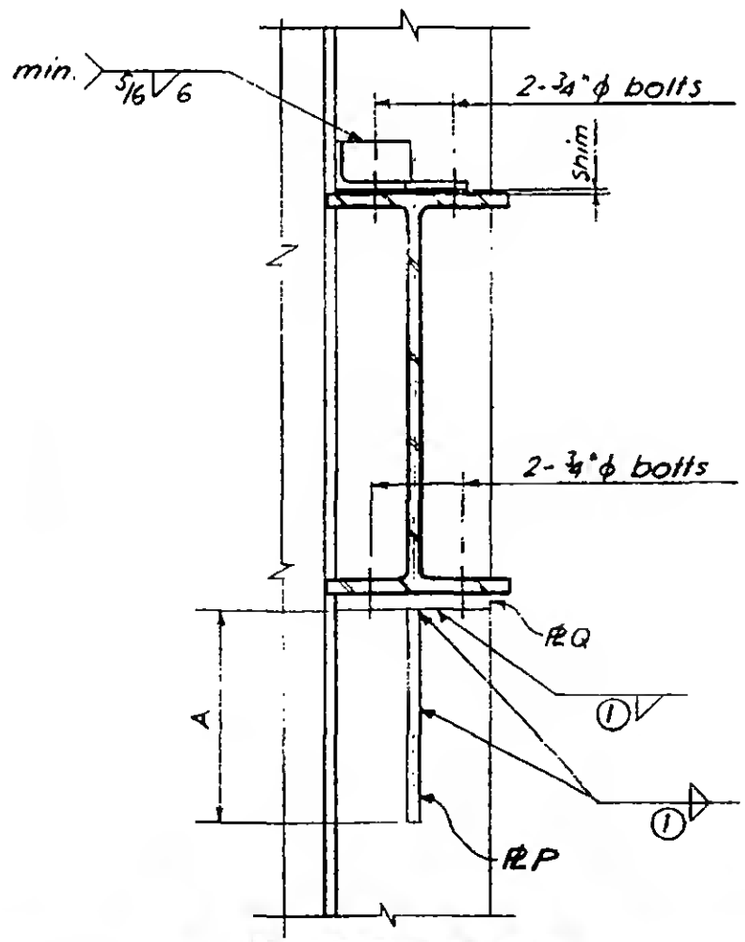

Section a-a

SCHEDULE				
BEAM SIZE	PL P	PL Q	DIM. A	WELD (1)
12 WF	7½" × ¾" × 1'-2"	¾"	1'-2"	½
16 WF	7½" × ¾" × 1'-2"	¾"	1'-3"	½
30 WF	7½" × 1" × 1'-10"	1"	1'-10"	½
33 WF	7½" × 1" × 1'-8"	1"	1'-8"	½

LICENSED PROFESSIONAL ENGINEER LESLIE E. ROBERTSON No. 34360 STATE OF NEW YORK

6-AB2-11