WORTHINGTON, SKILLING, HELLE & JACKSON — Civil & Structural Engineers

PROJECT: THE WORLD TRADE CENTER | TITLE: CONNECTION DETAIL III K,N,P,Q,U,W | DATE: 7-28-67

REVISIONS
9-15-67
10-5-67
11-16-67
12-13-67

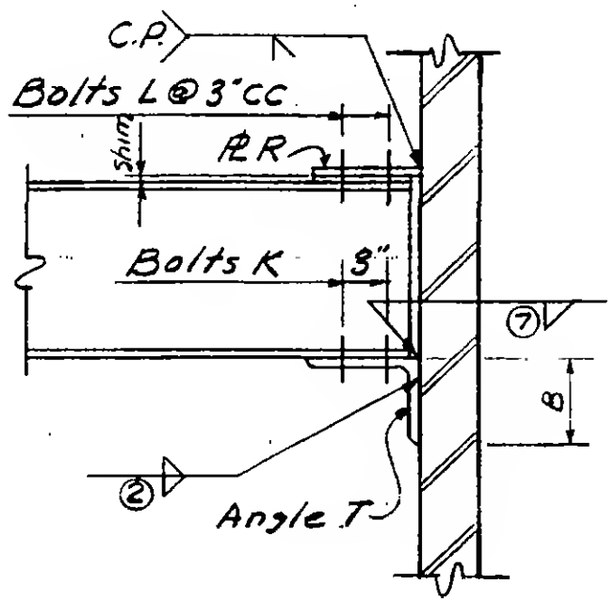

Elevation

For details K & P use bolts w/washers on web

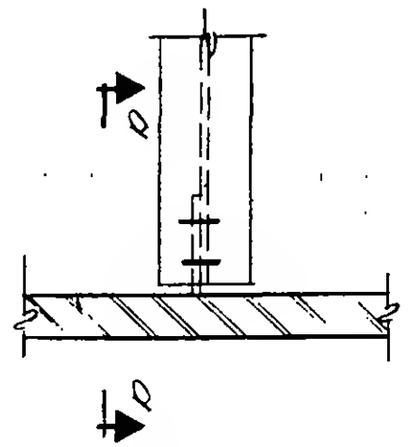

Plan

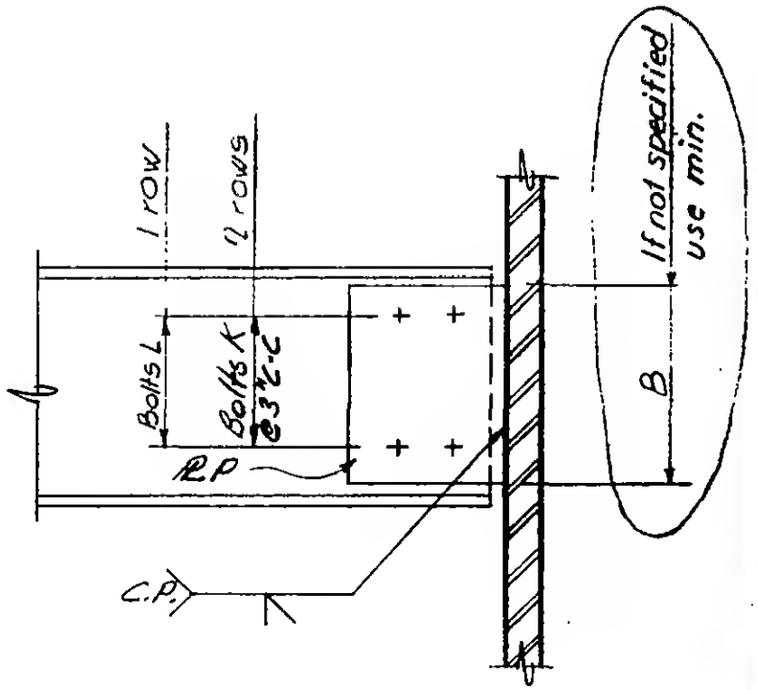

Section a-a

Note: Use alt. for all scheduled Details, Flor 10 and above

Detail III N

Detail III K, P, Q, U, W

G-AB2-1