SKILLING - HELLE - CHRISTIANSEN - ROBERTSON — Structural & Civil Engineers

PROJECT: THE WORLD TRADE CENTER | TITLE: CONNECTION DETAIL III R, S, I & V | DATE: 10-2-67

REVISIONS

10-31-67

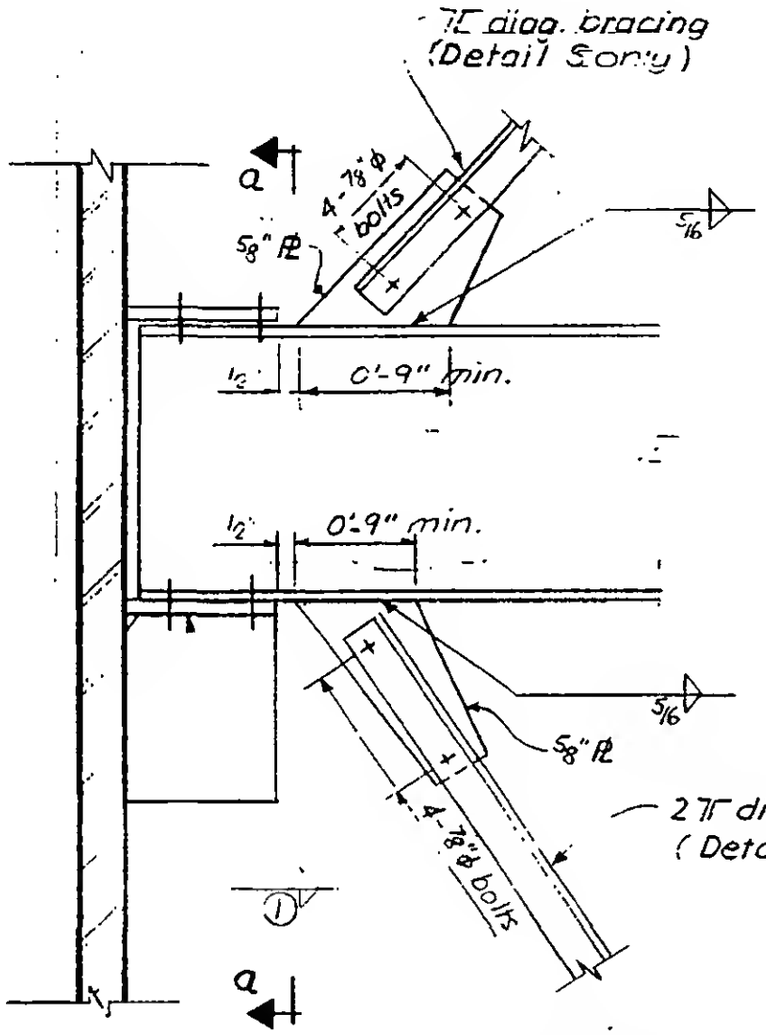

Elevation

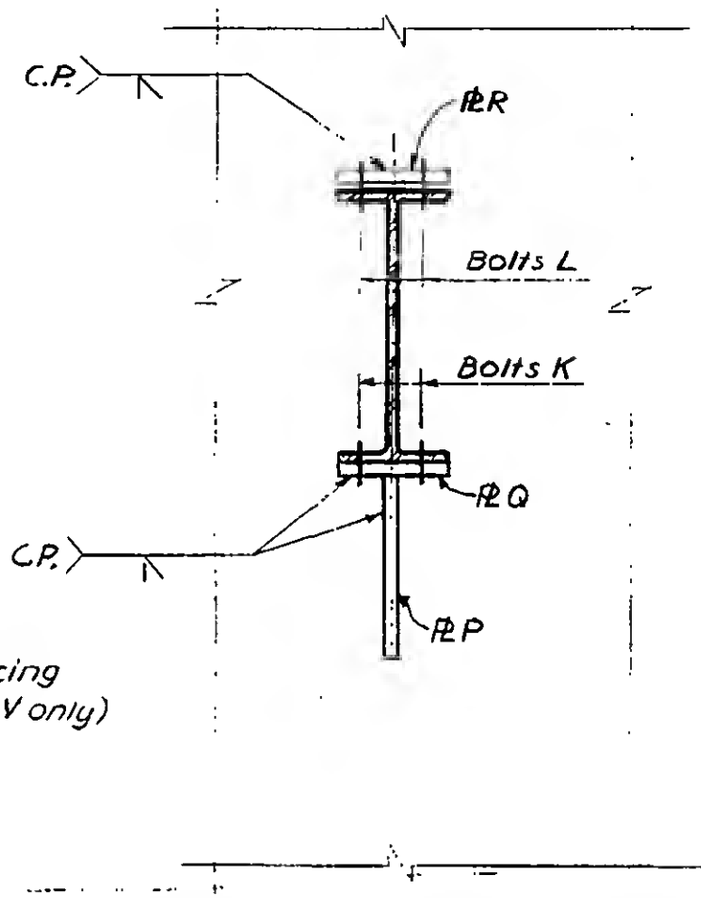

Section a-a

Detail III R: See G-AB5-97 for bracing elevation
Detail III S, V: See G-AB5-97 or G-AB5-98 for bracing elevation

LICENSED PROFESSIONAL ENGINEER
LESLIE E. ROBERTSON
No. 34367
UNIVERSITY OF THE STATE OF NEW YORK

6-AB2-13.6