SKILLING - HELLE - CHRISTIANSEN - ROBERTSON Structural & Civil Engineers

PROJECT THE WORLD TRADE CENTER | TITLE PUMP PLATFORM AT SERVICE LEVEL (El. 294') | DATE 12-18-67

REVISIONS

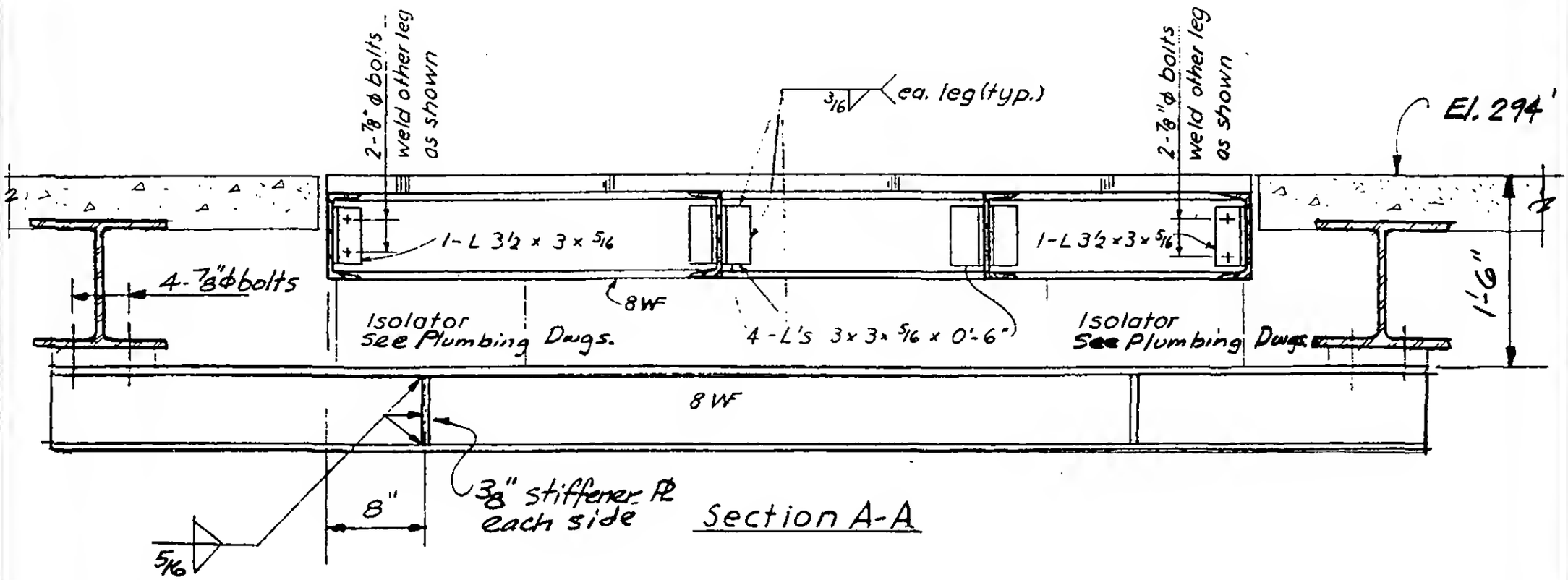

Section A-A

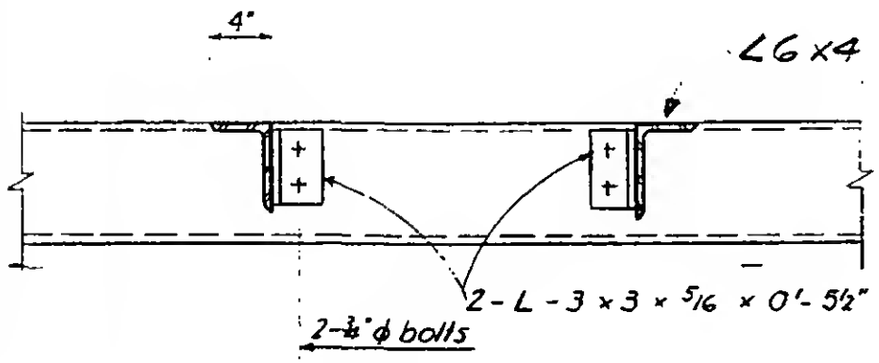

Section B-B (typ.)

LICENSED PROFESSIONAL ENGINEER LESLIE E. ROBERTS No. 34360 UNIVERSITY OF THE STATE OF NEW YORK

6-AB2-31