SKILLING - HELLE - CHRISTIANSEN - ROBERTSON Structural & Civil Engineers

PROJECT THE WORLD TRADE CENTER | TITLE PUMP PLATFORM TROLLEY SUPPORT DETAILS | DATE 1-24-68

REVISIONS

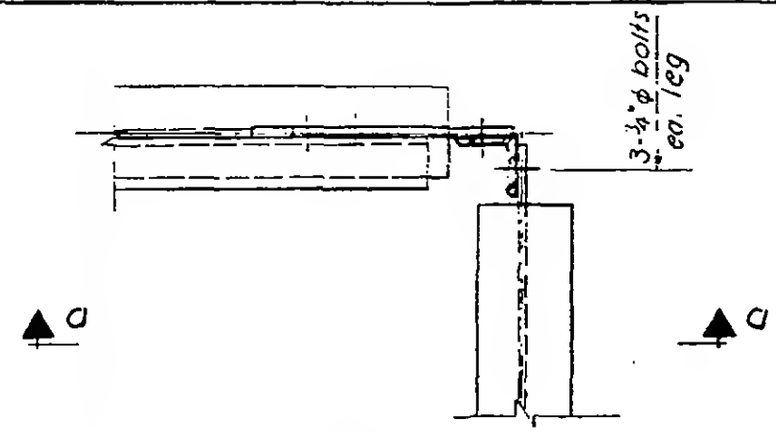

Plan

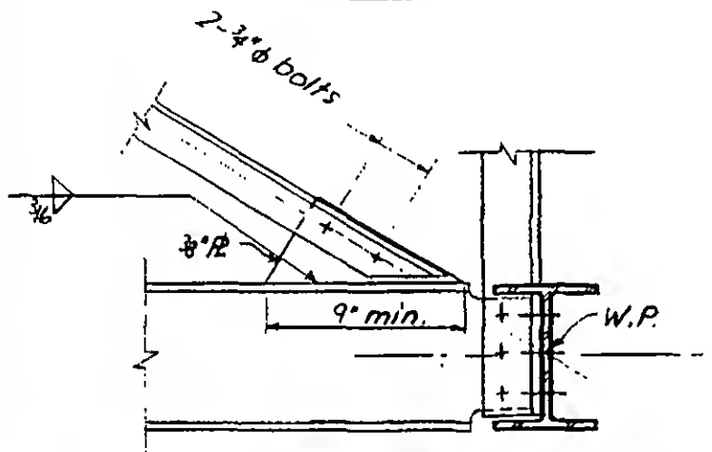

Section a-a

DETAIL E	DETAIL F
DETAIL G	DETAIL H

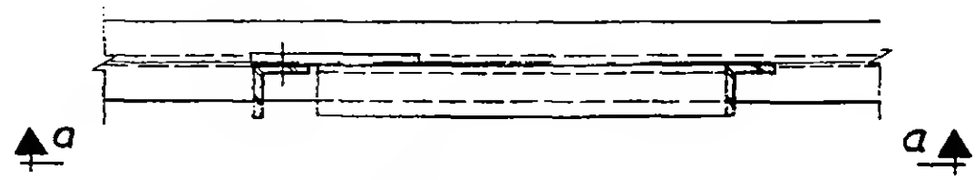

Plan

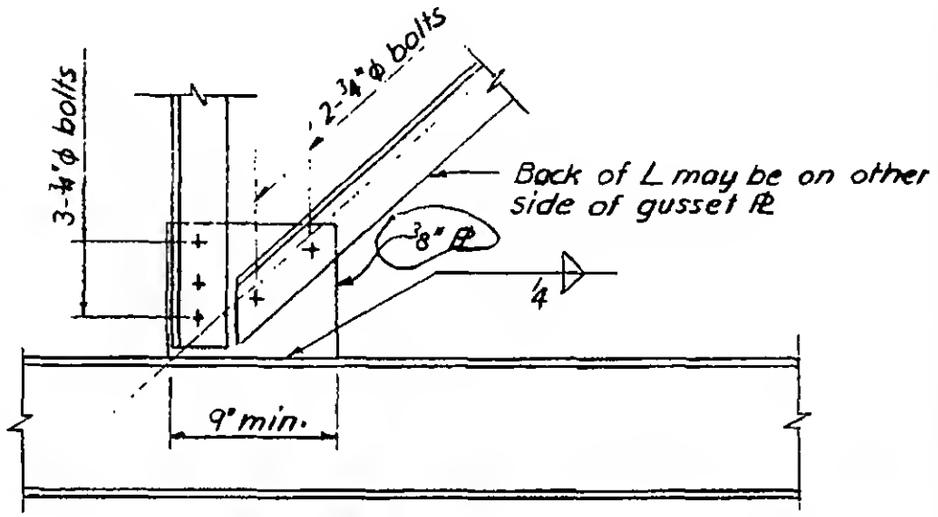

Section a-a

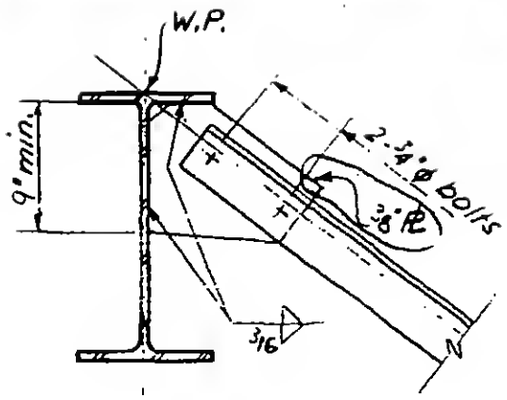

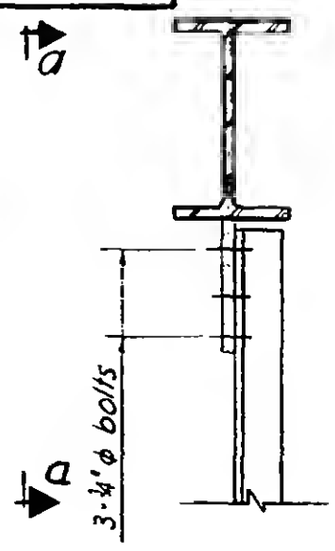

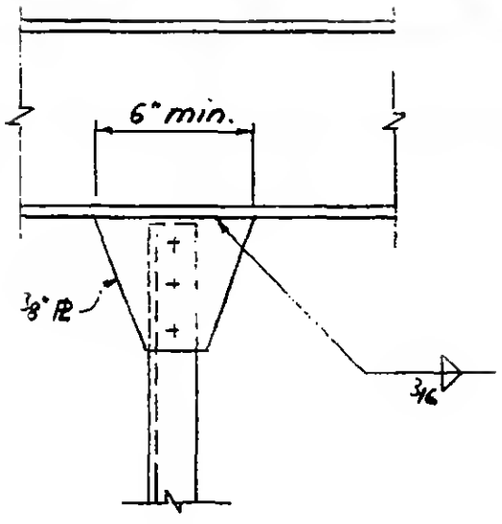

Section a-a

6-AB2-35

LICENSED PROFESSIONAL ENGINEER
LESLIE E. ROBERTSON
No. 34360
UNIVERSITY OF THE STATE OF NEW YORK