SKILLING - HELLE - CHRISTIANSEN - ROBERTSON Structural & Civil Engineers

PROJECT THE WORLD TRADE CENTER | TITLE PUMP PLATFORM SUPPORT DETAILS AT 41 ST. FLOOR | DATE 1-24-68

REVISIONS

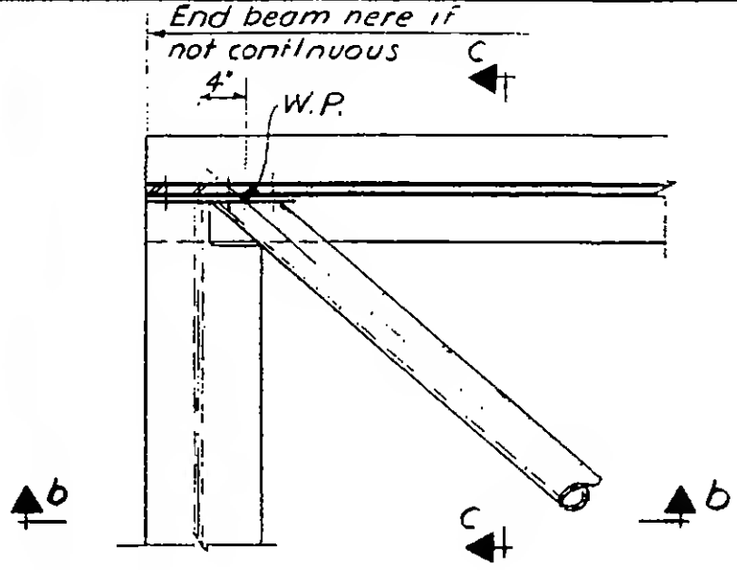

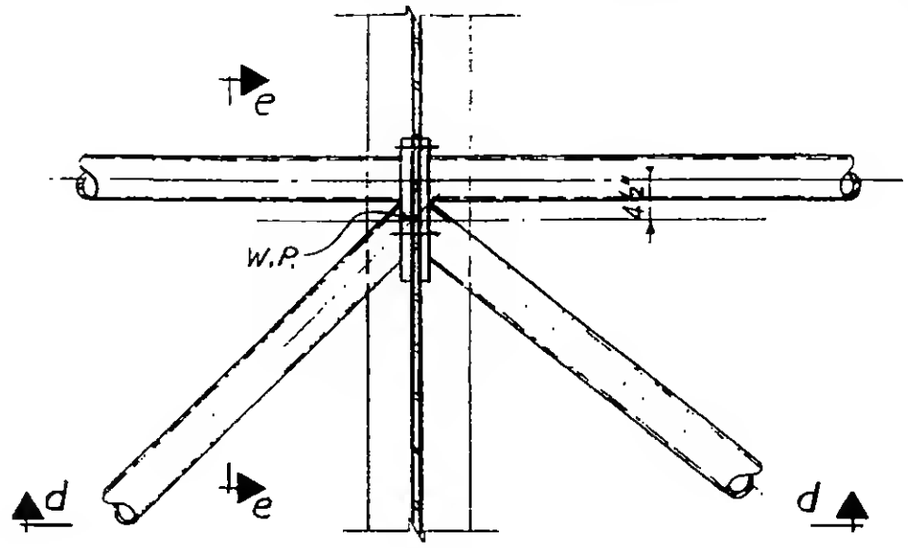

Plan Detail A

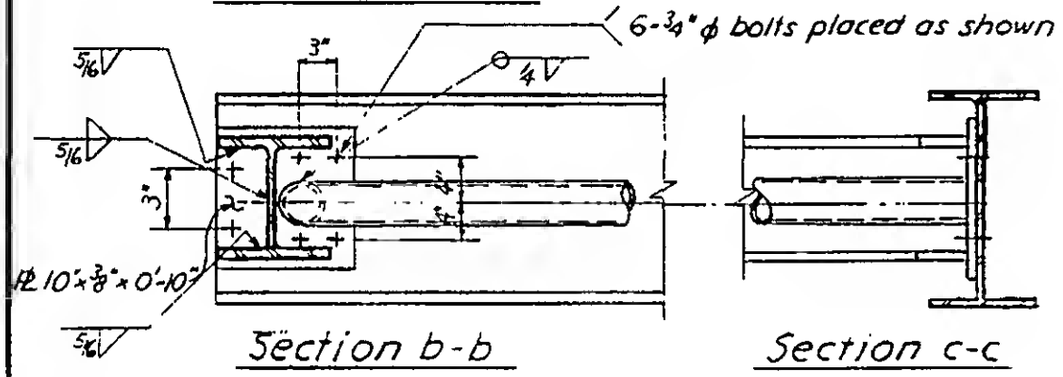

Section b-b

Section c-c

Plan Detail B

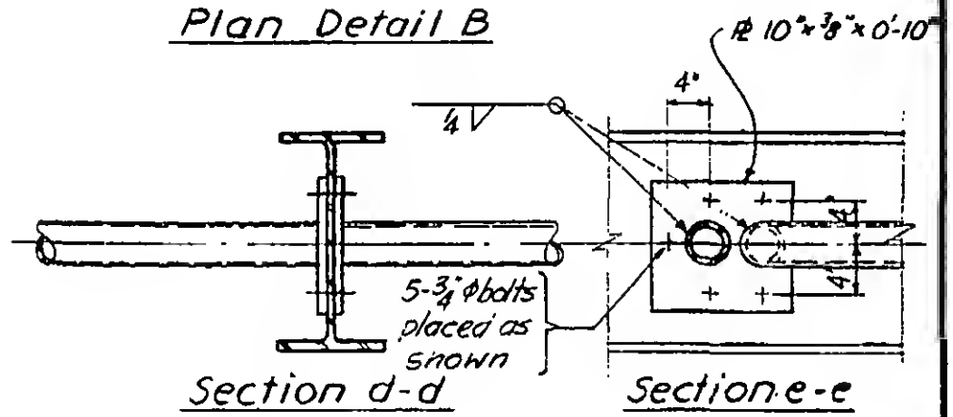

Section d-d

Section e-e

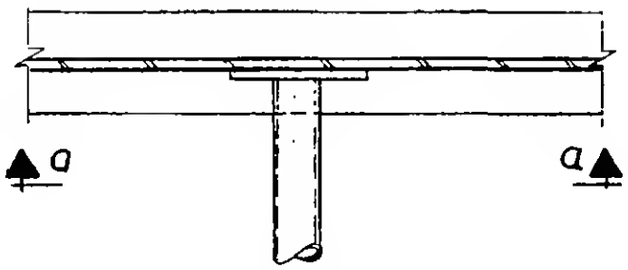

Plan Detail C

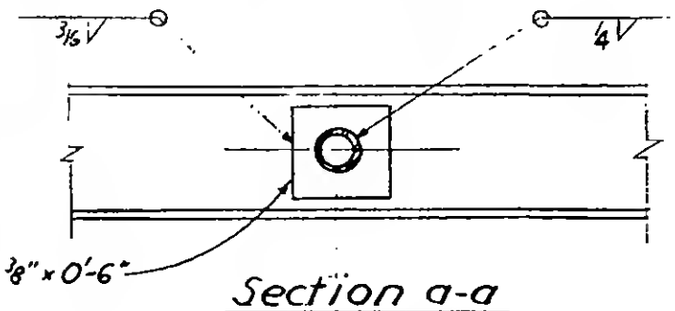

Section a-a

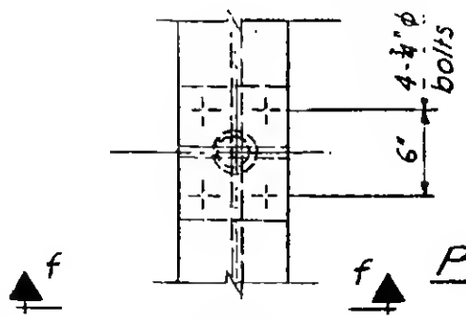

Plan Detail D

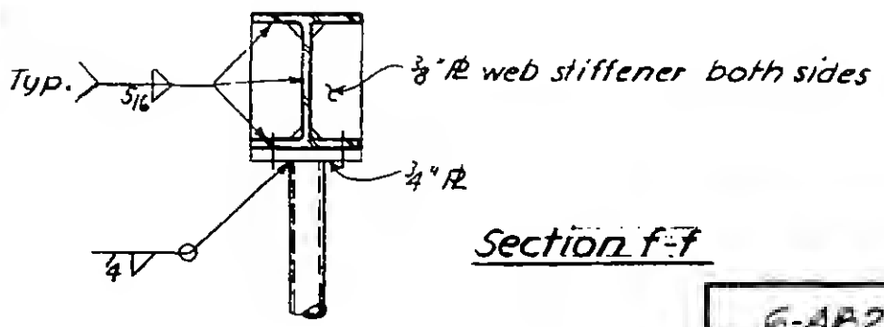

Section f-f

6-AB2-40

LICENSED PROFESSIONAL ENGINEER
LESLIE E. ROBERTSON
No. 34350
UNIVERSITY OF THE STATE OF NEW YORK