SKILLING - HELLE - CHRISTIANSEN - ROBERTSON Structural & Civil Engineers

PROJECT THE WORLD TRADE CENTER | TITLE PUMP PLATFORM EL 294 TOWER B | DATE 2-12-68

REVISIONS
-11-68

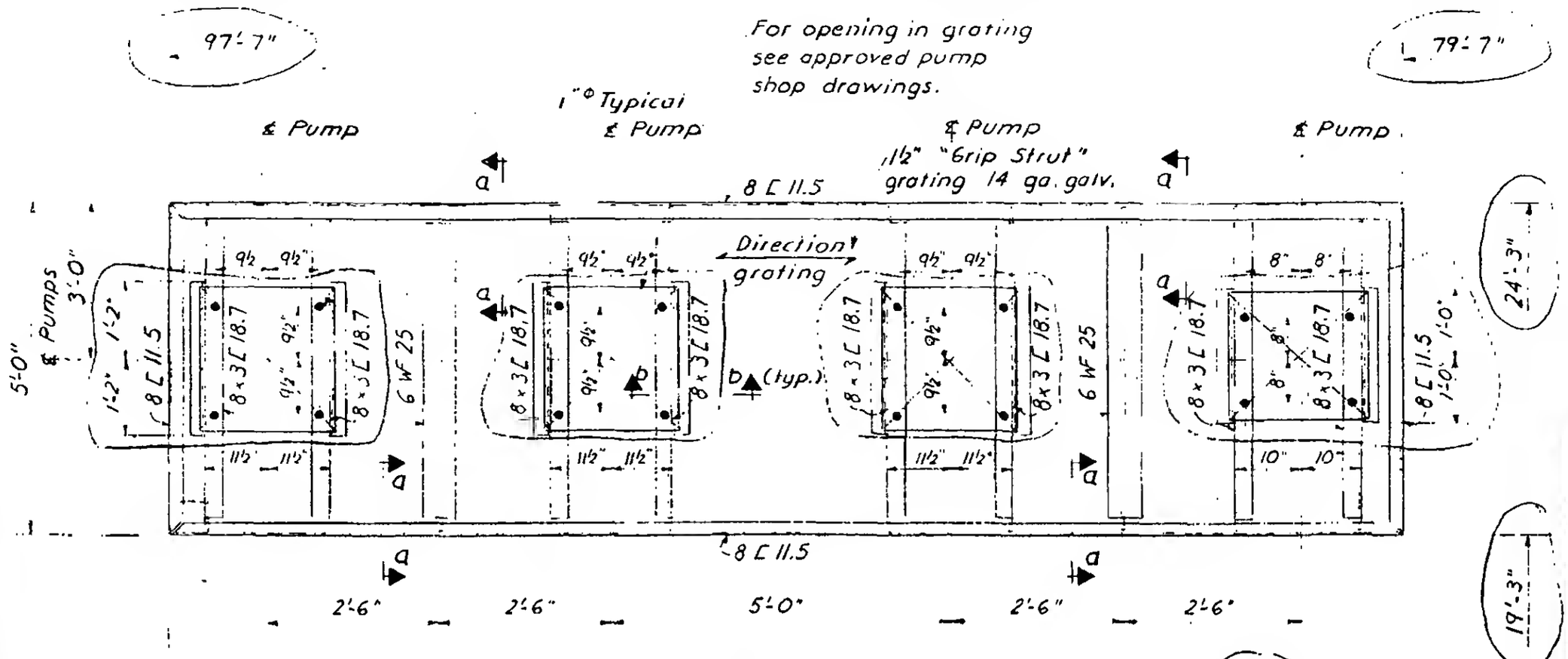

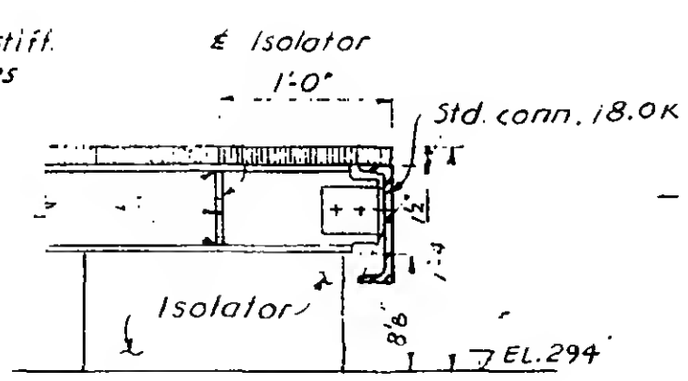

Section a-a

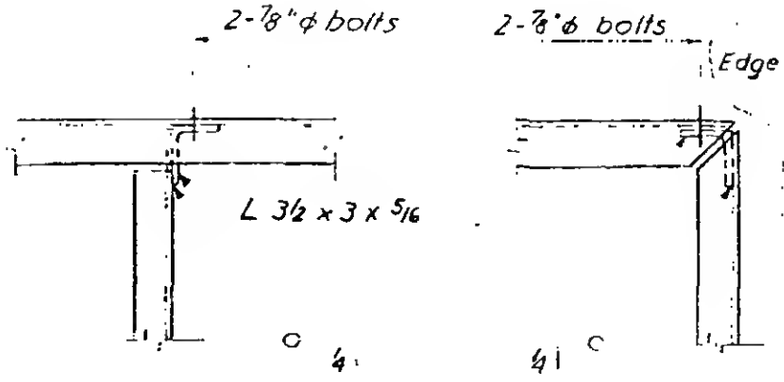

Typical Details

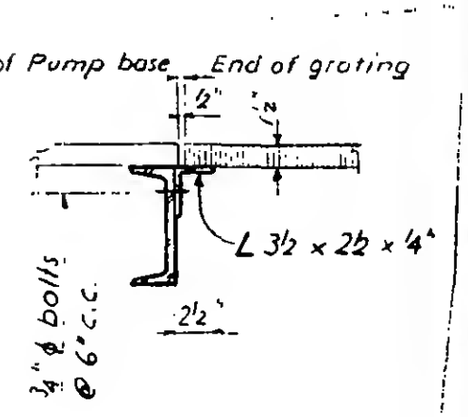

Section b-b

LICENSED PROFESSIONAL ENGINEER
LESLIE E. ROBERTSON
No. 34[illegible]0
UNIVERSITY OF THE STATE OF NEW YORK

6-AB2-41