SKILLING - HELLE - CHRISTIANSEN - ROBERTSON Structural & Civil Engineers

PROJECT THE WORLD TRADE CENTER | TITLE PUMP PLATFORM TROLLEY SUPPORT - DETAILS | DATE 2-21-68

REVISIONS

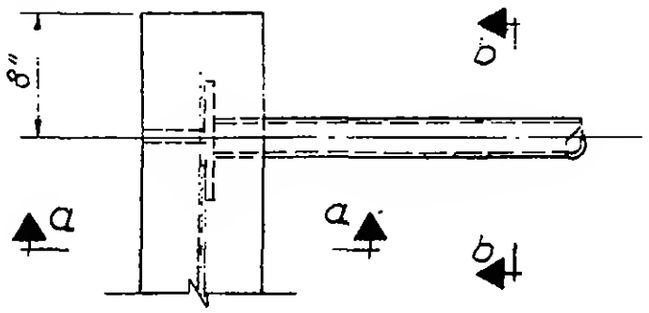

Detail E

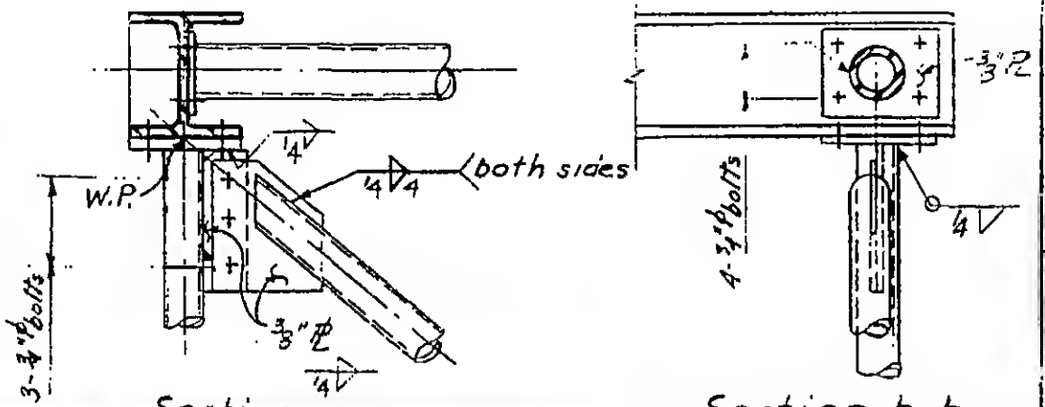

Section a-a

Section b-b

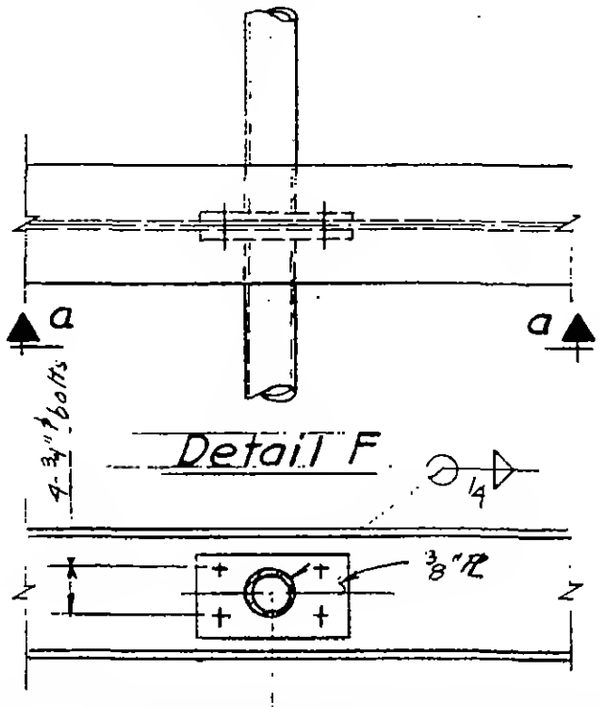

Detail F

Section a-a

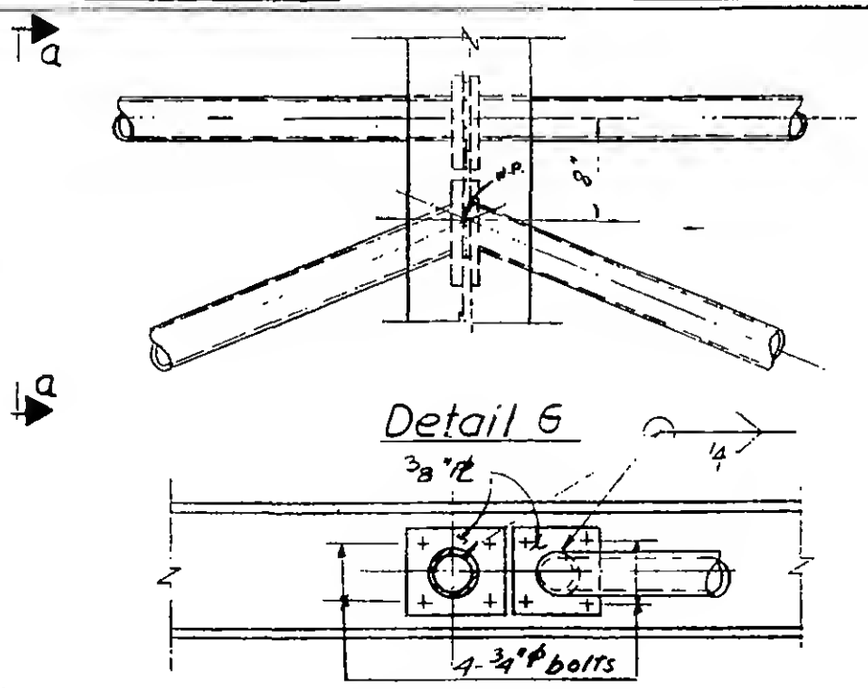

Detail 6

Section a-a

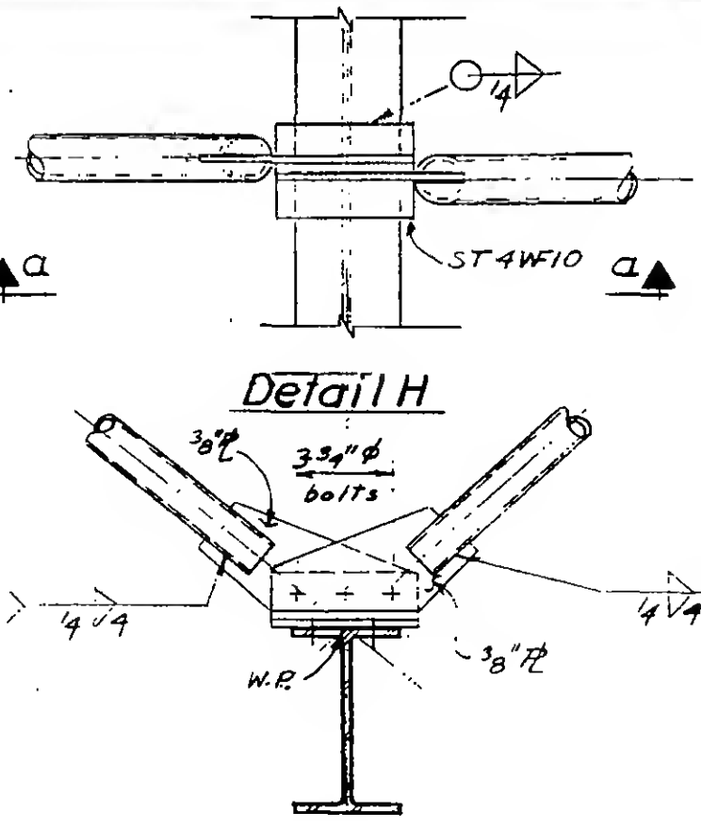

Detail H

Section a-a

6-AB2-45

LICENSED PROFESSIONAL ENGINEER
LESLIE E. ROBERTSON
No. 34360
UNIVERSITY OF THE STATE OF NEW YORK