SKILLING - HELLE - CHRISTIANSEN - ROBERTSON Structural & Civil Engineers

PROJECT THE WORLD TRADE CENTER | TITLE CONNECTION DETAIL 159 - 160 | DATE 11-21-67

REVISIONS

12-21-67

8-29-68

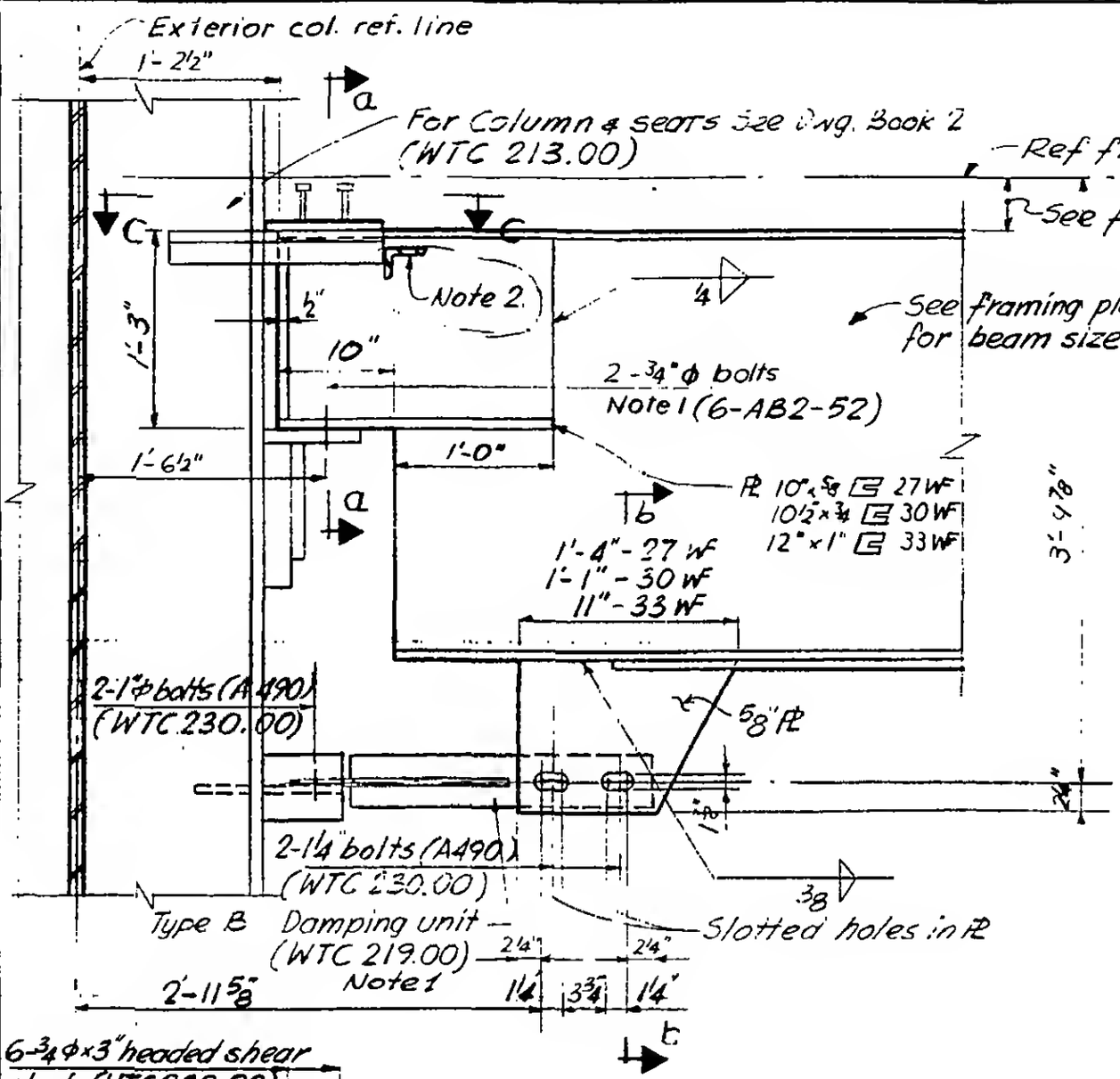

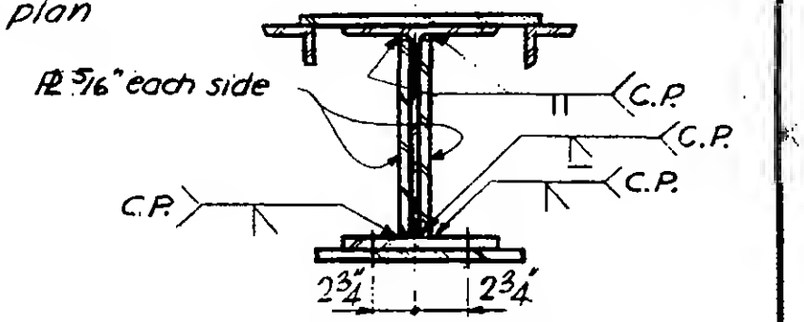

Section a-a

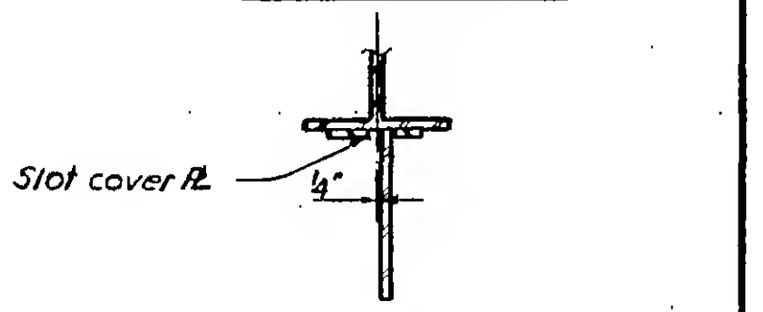

Section b-b

Note: 1. Damping unit to be installed after slab has been cast.
2. Dock shelf L 3x2 for details, see Det. WW 6-AB3-25.

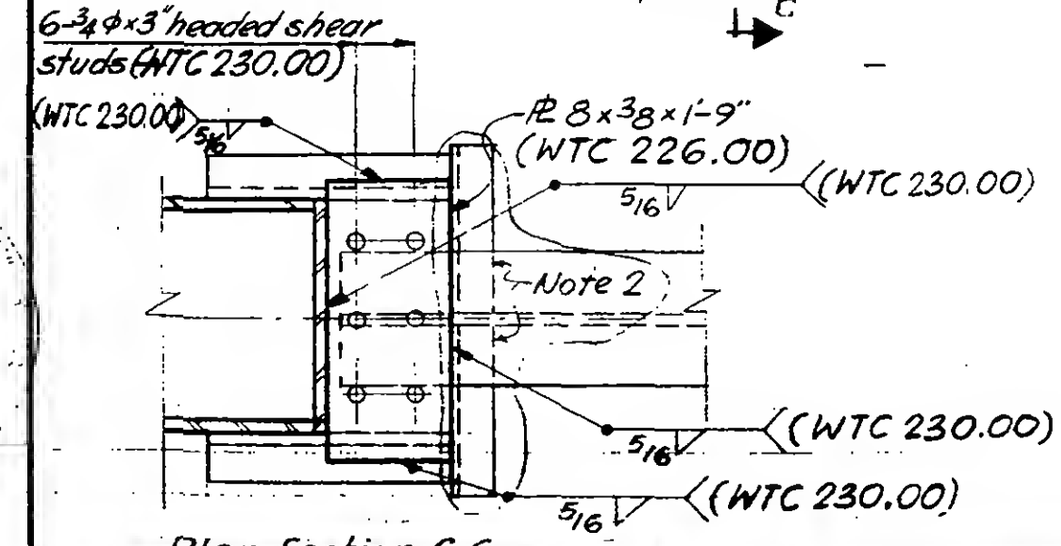

Plan Section C-C

6-AB2-55