SKILLING - HELLE - CHRISTIANSEN - ROBERTSON Structural & Civil Engineers

PROJECT THE WORLD TRADE CENTER | TITLE CONNECTION DETAIL 162 & 166 A - D | DATE 11-21-67

REVISIONS

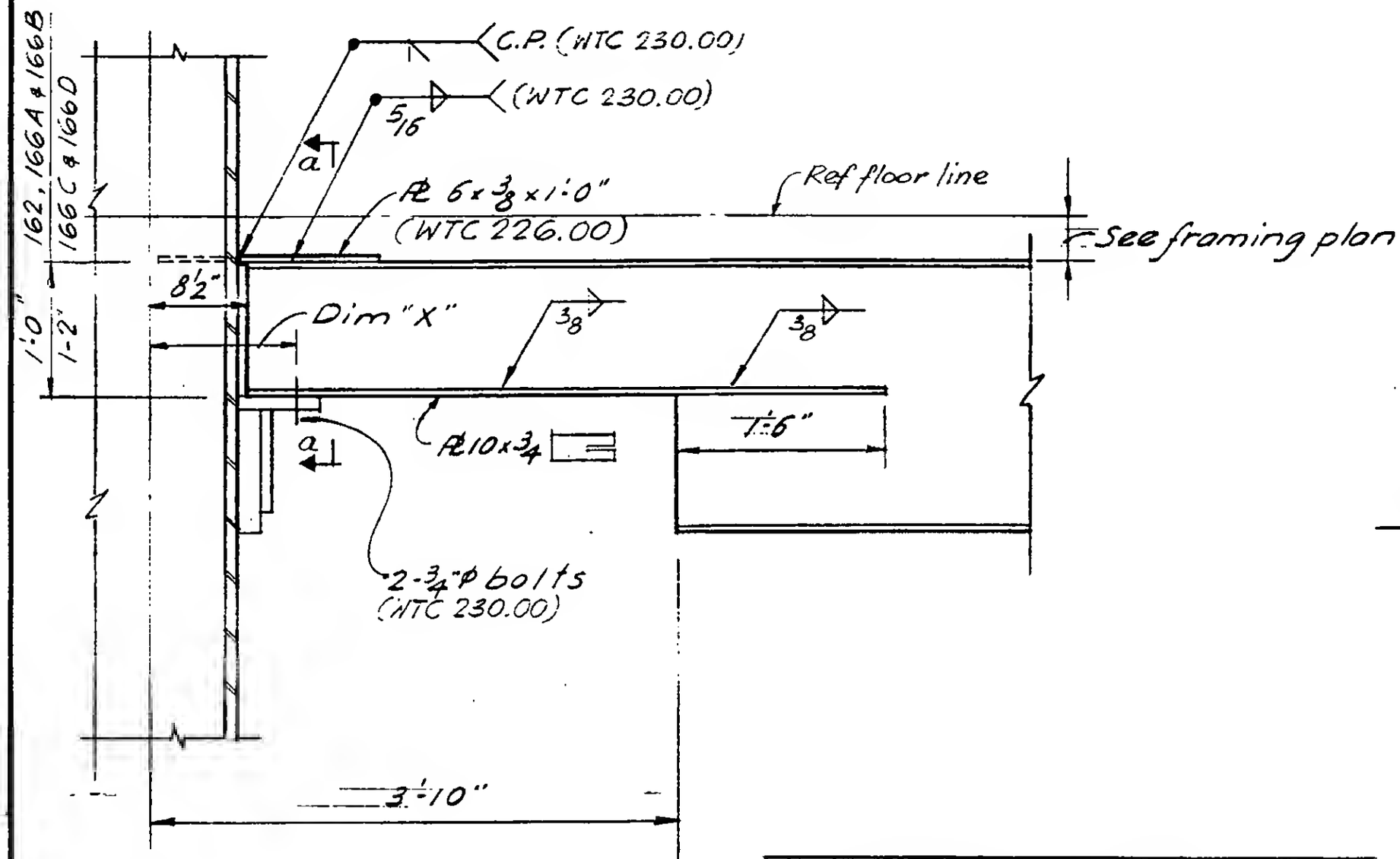

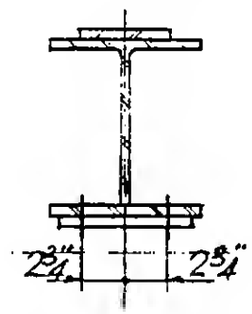

Section a-a

Schedule Det. 166		
Floor	Dim. X" (166 A & C)	Dim. X" (166 B & D)
44, 46, 47, 48	1'-0 3/8"	10 3/8"
49	1'-0 5/16"	10 5/16"
78, 80 - 83	11 15/16"	9 15/16"

LICENSED PROFESSIONAL ENGINEER
LESLIE E. ROBERTSON
No. 34360
UNIVERSITY OF THE STATE OF NEW YORK

6-AB2-57