SKILLING - HELLE - CHRISTIANSEN - ROBERTSON Structural & Civil Engineers

PROJECT THE WORLD TRADE CENTER | TITLE CONNECTION DETAIL 164, 164 A | DATE 11-21-67

REVISIONS

8-17-68

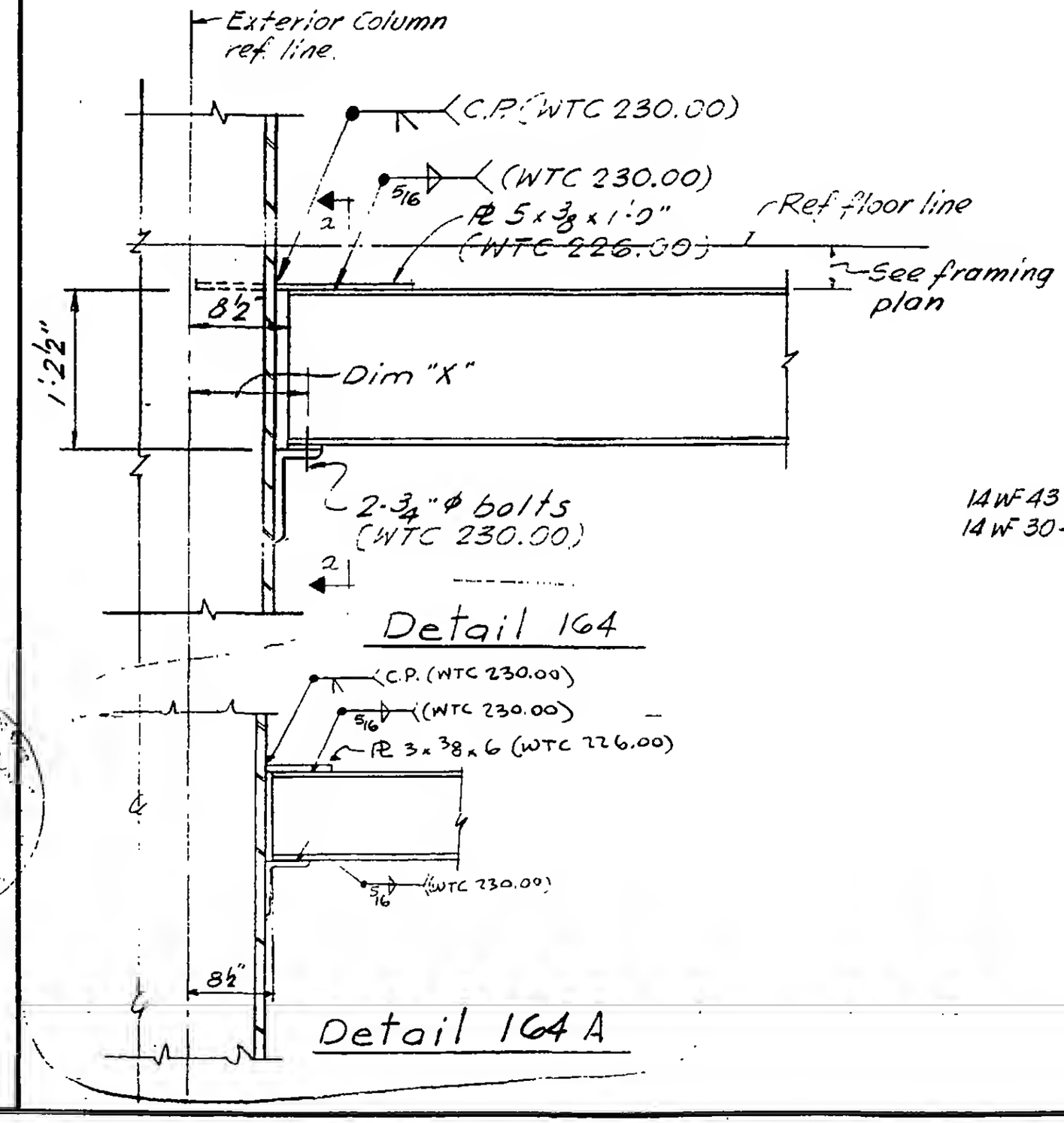

Schedule	
Floors	Dim. "X"
44	10 3/8"
78	9 15/16"

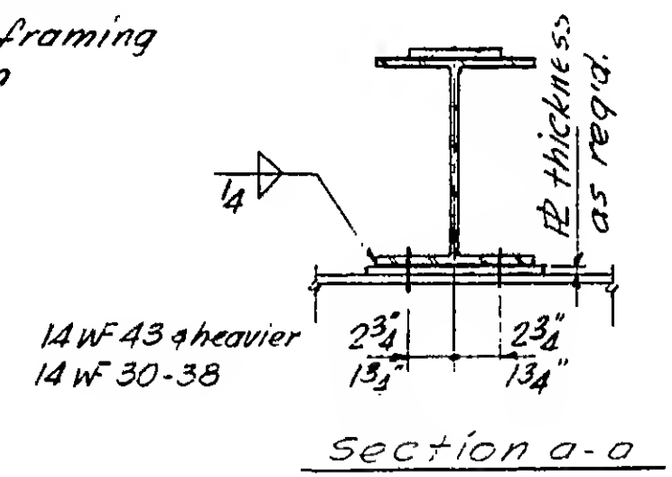

LICENSED PROFESSIONAL ENGINEER LESLIE E. ROBERTSON UNIVERSITY OF THE CITY

6-AB2-59