SKILLING - HELLE - CHRISTIANSEN - ROBERTSON Structural & Civil Engineers

PROJECT THE WORLD TRADE CENTER | TITLE CONNECTION DETAIL 165 | DATE 11-21-67

REVISIONS

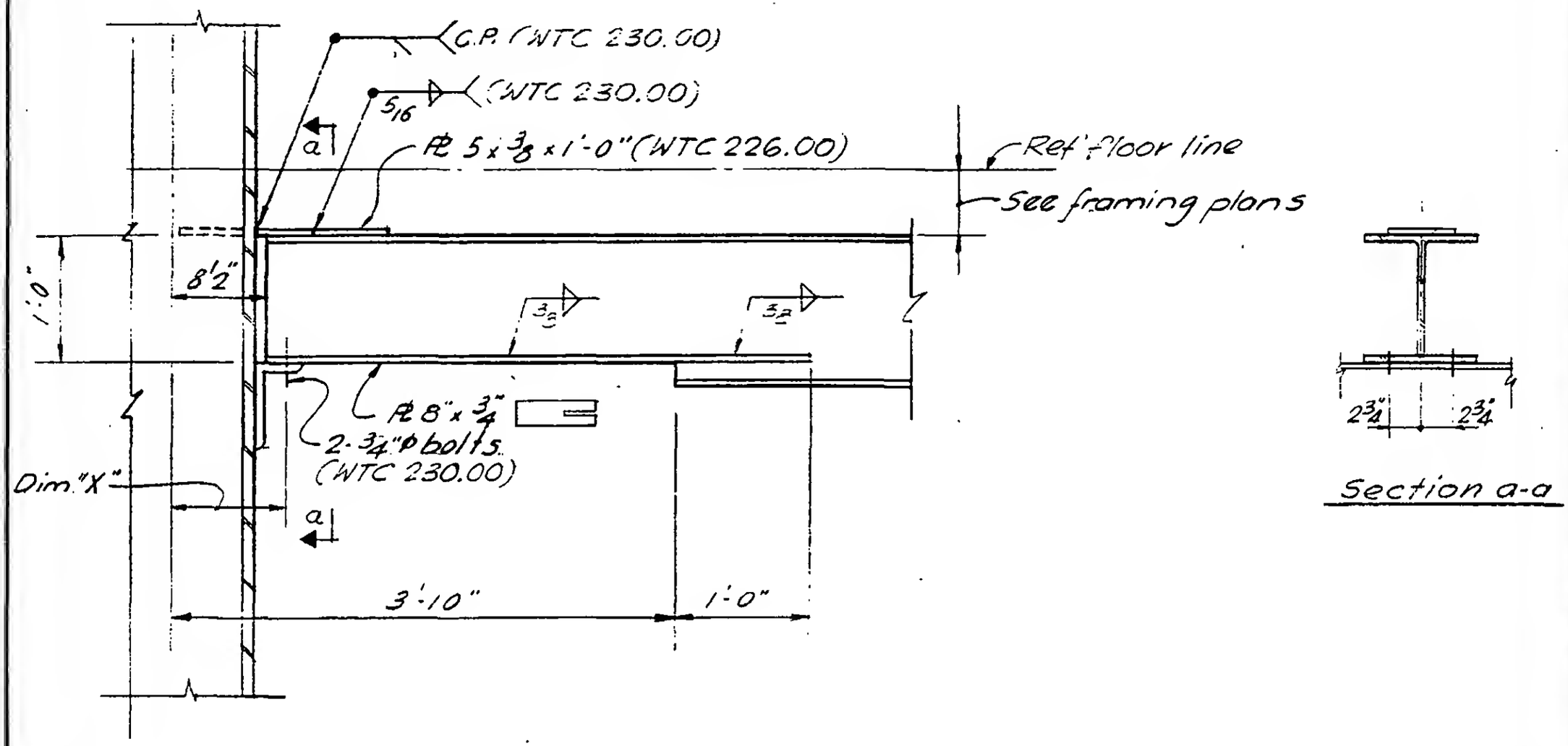

Schedule	
Floors	Dim. "X"
44. 46. 47. 48	10 3/8"
49	10 5/16"
78. 80 - 83	9 15/16"

LICENSED PROFESSIONAL ENGINEER LESLIE E. ROBERTSON UNIVERSITY OF THE STATE OF NEW YORK

6-AB2-60