WORTHINGTON, SKILLING, HELLE & JACKSON — Civil & Structural Engineers

PROJECT: THE WORLD TRADE CENTER | TITLE: CONNECTION DETAIL 170 A thru G | DATE: 6-30-67

REVISIONS
7-28-67
8-5-67
8-14-67

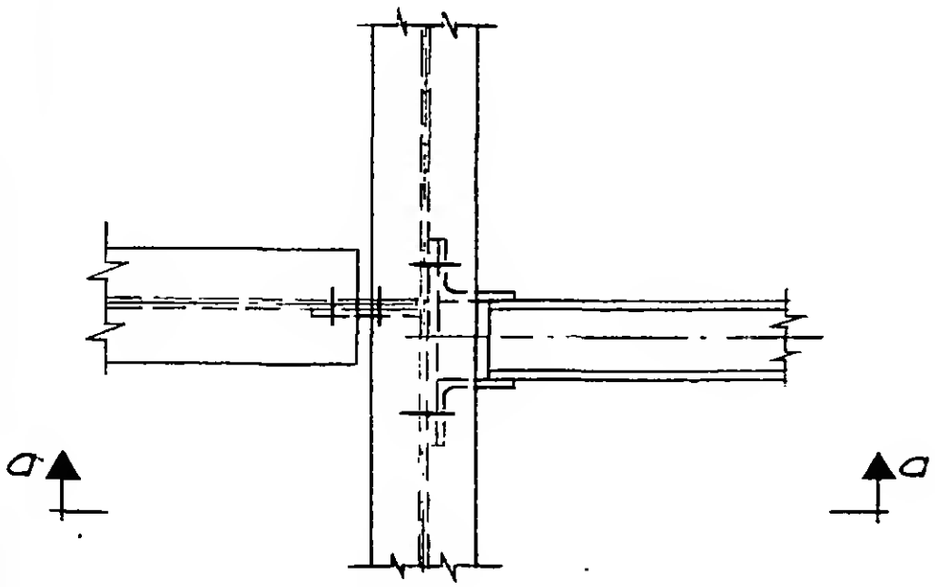

Plan

See detail 450 (6 AB1-101) for connection of □

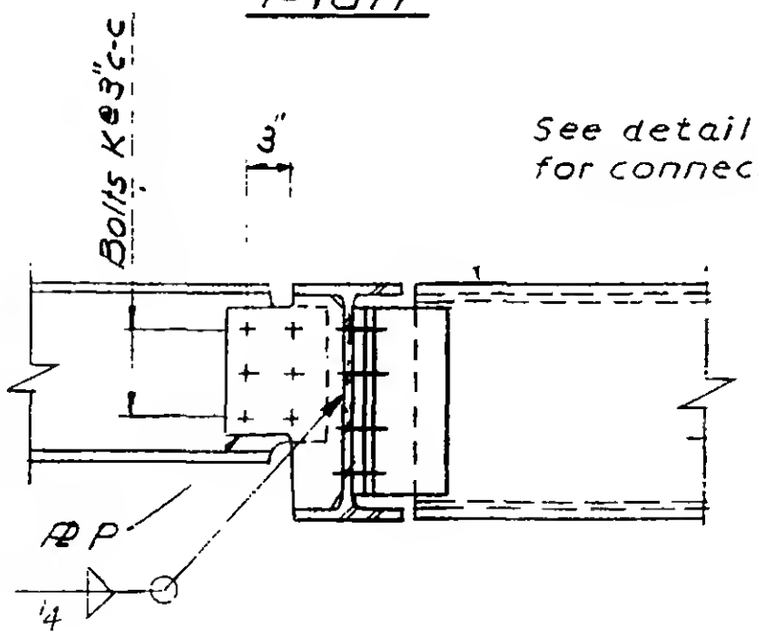

Section a-a
Detail 170 A

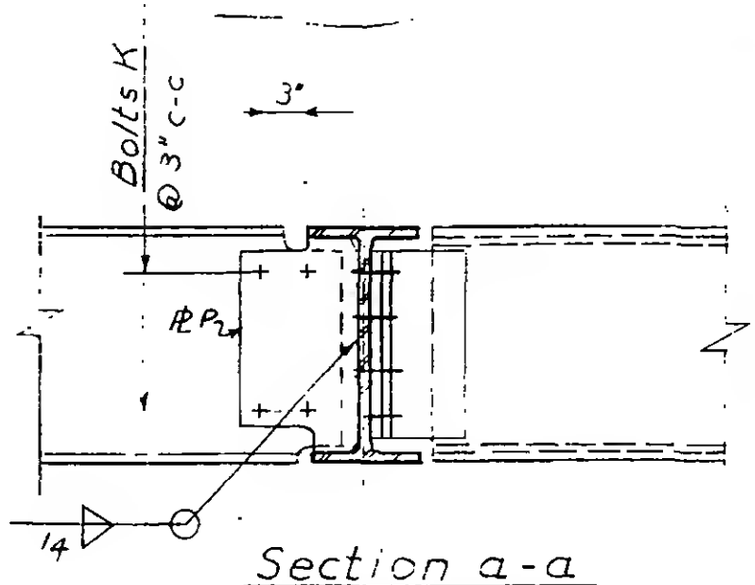

Section a-a
Detail 170 B, E, F

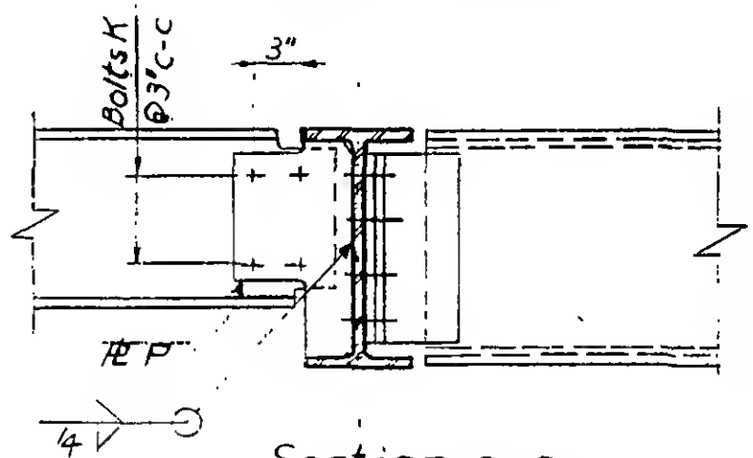

Section a-a
Detail 170 C, G

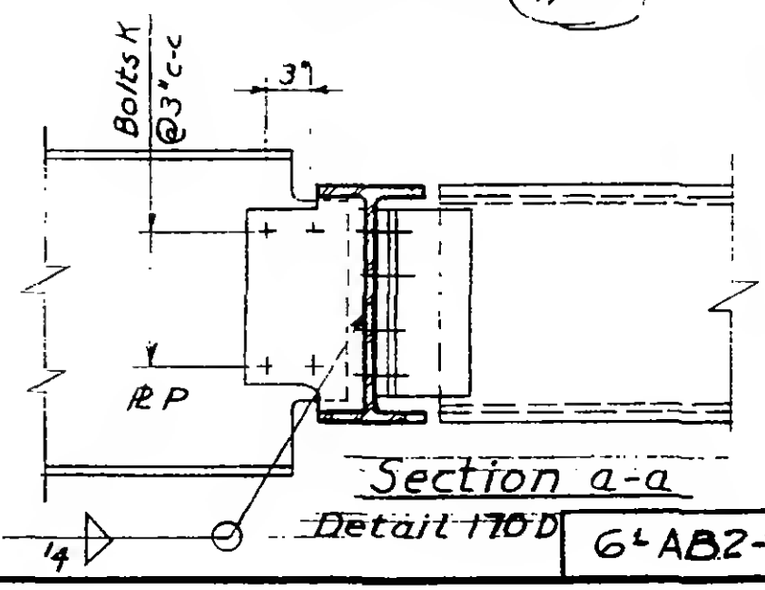

Section a-a
Detail 170 D

6 AB2-13

LICENSED PROFESSIONAL ENGINEER
LESLIE E. ROBERTSON
No. 34360
OF THE STATE OF NEW YORK