SKILLING - HELLE - CHRISTIANSEN - ROBERTSON Structural & Civil Engineers

PROJECT THE WORLD TRADE CENTER | TITLE CONNECTION DETAILS 171 A, B | DATE 10-5-67

REVISIONS

1

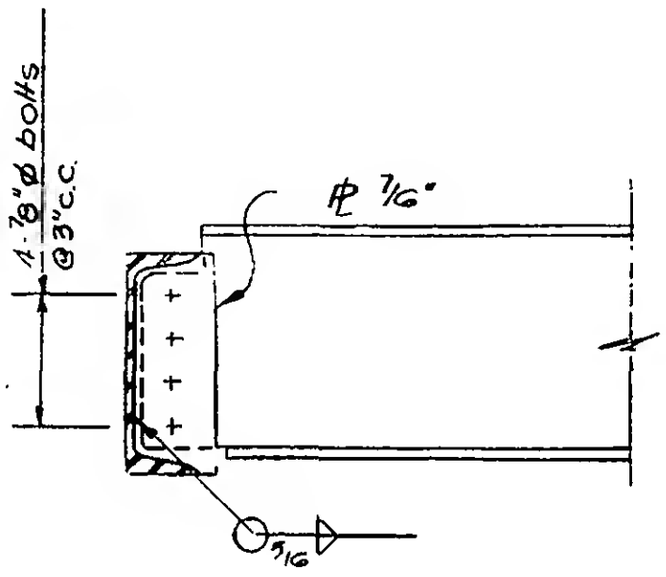

Elevation
Det. 171 A

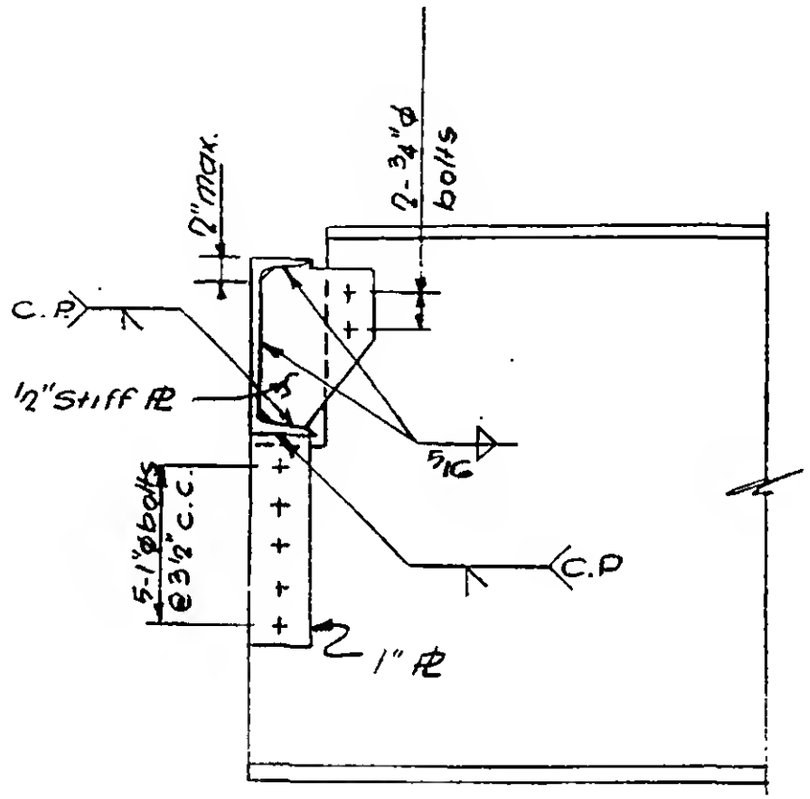

Elevation
Det 171 B

LESLIE E. ROBERTSON
No. 34360
UNIVERSITY OF THE STATE OF NEW YORK

G-AB2-73-5