WORTHINGTON, SKILLING, HELLE & JACKSON — Civil & Structural Engineers

PROJECT THE WORLD TRADE CENTER | TITLE CONNECTION DETAIL 172 A, B & C | DATE 5-9-67

REVISIONS

7-28-67
8-5-67
9-15-67
10-2-67
10-5-67
11-17-67

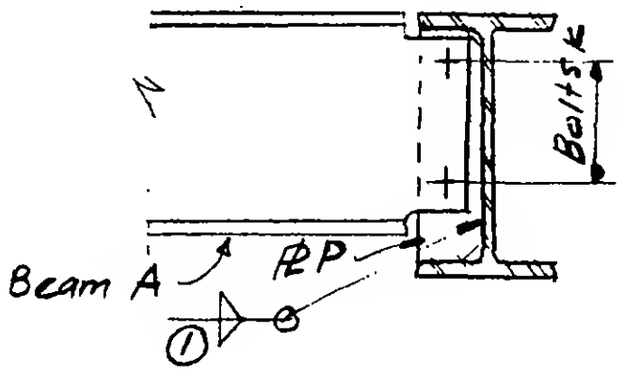

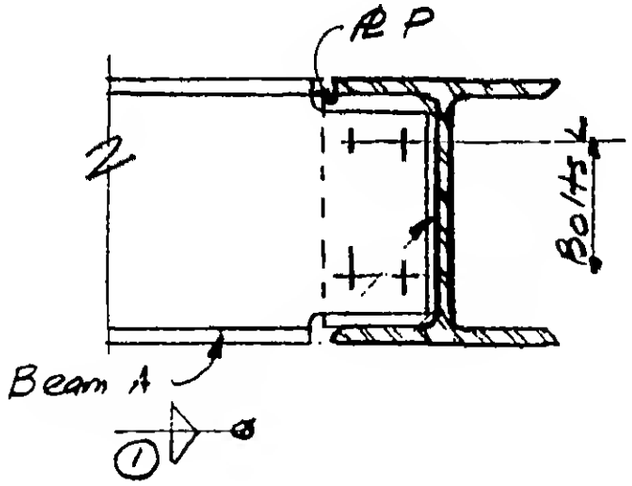

SCHEDULE

Detail	Beam A	Plate P	Bolts K	Bolts L	Weld (1)
172A	24 WF, 24×61	4"x 1/2"	7-1"ϕ	-	3/8
172A	16 WF, 18 WF	4"x 1/2"	4-7/8"ϕ	-	3/8
172A	12 WF 58 # lighter	7"x 1/2"	—	6-3/4"ϕ	3/8
172A	12 WF 65 # heavier*	7"x 3/4"	-	6-1"ϕ	1/2
172B	14 B	4"x 1/2"	4-3/4"ϕ	-	5/16
172B	10 WF, 12 B	4"x 3/8"	3-3/4"ϕ	—	1/4
172B	12 WF, 14 WF	4"x 3/8"	3-7/8"ϕ	—	1/4
172B	16 WF # 16 B	4"x 3/8"	4-3/4"ϕ	—	1/4
172B	30×7 BU, (38×7 BU)	4"x 1/2"	5-7/8"ϕ	—	3/8
172C	12 B	7"x 3/8"	—	4-7/8"ϕ	5/16
172C	8 B	7"x 3/8"	—	4-3/4"ϕ	1/4
172C	18 x 7 1/2 WF	4"x 1/2"	4-1"ϕ	—	3/8

* Except as otherwise shown above

LICENSED PROFESSIONAL ENGINEER LESLIE E. ROBERTSON No. 34960 CITY OF THE STATE OF NEW YORK

G-AB2-74