SKILLING - HELLE - CHRISTIANSEN - ROBERTSON Structural & Civil Engineers

PROJECT THE WORLD TRADE CENTER | TITLE CONNECTION DETAIL 173 B | DATE 1-24-68

REVISIONS

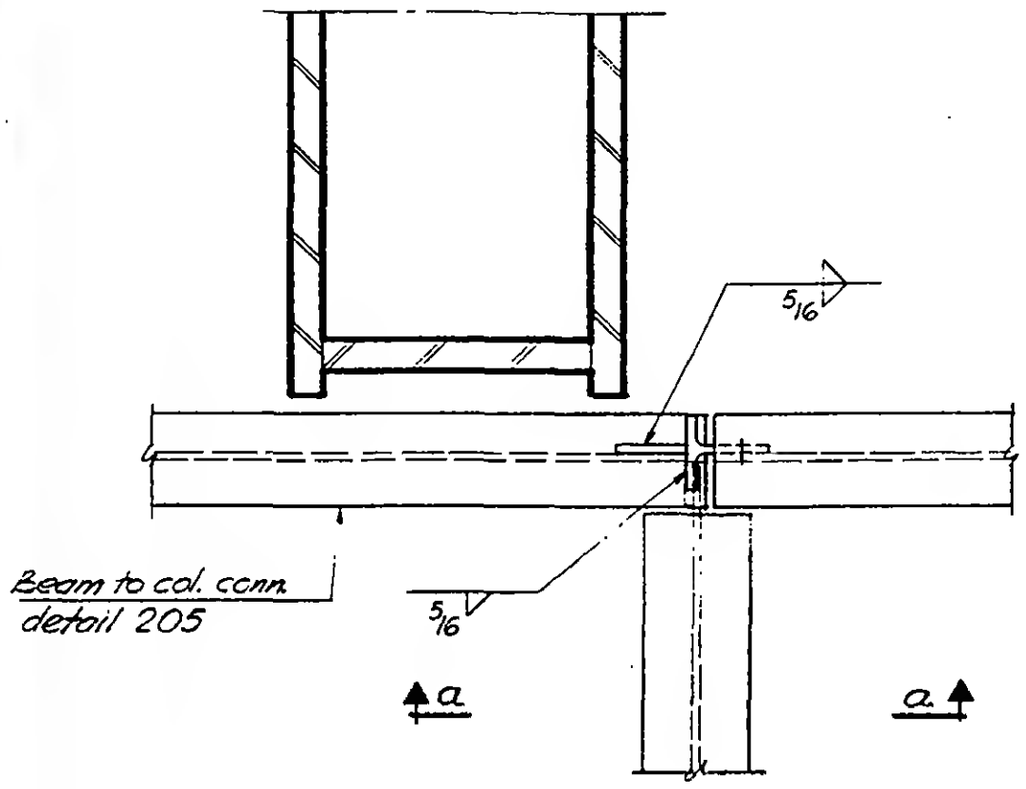

Plan

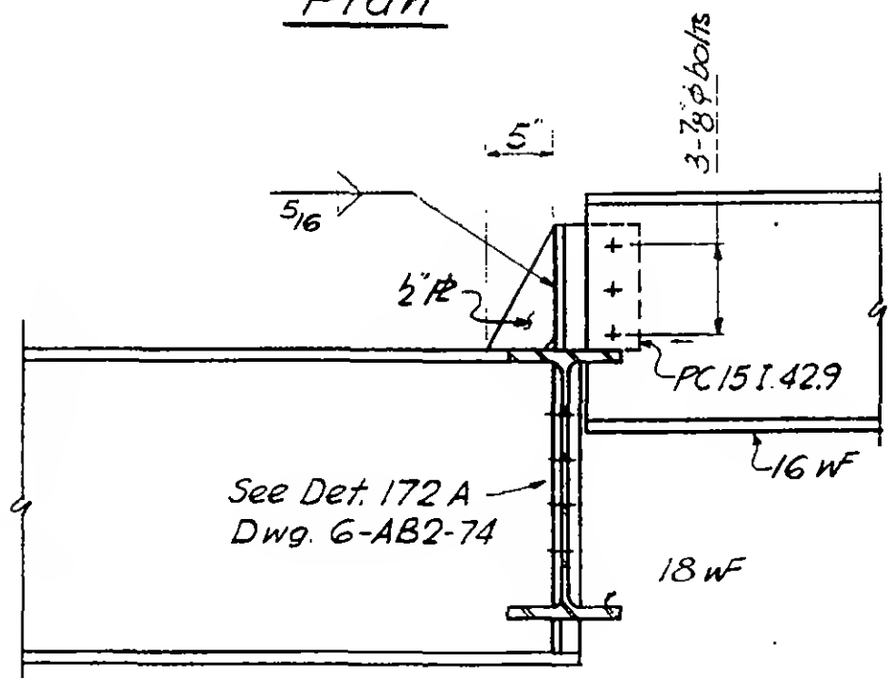

Section a-a

LESLIE E. ROBERTSON No. 34360 REGISTERED PROFESSIONAL ENGINEER STATE OF NEW YORK

6-AB2-75.1