SKILLING - HELLE - CHRISTIANSEN - ROBERTSON Structural & Civil Engineers

PROJECT THE WORLD TRADE CENTER | TITLE CONNECTION DETAIL 174 A,B | DATE 8-5-67

REVISIONS

9-15-67

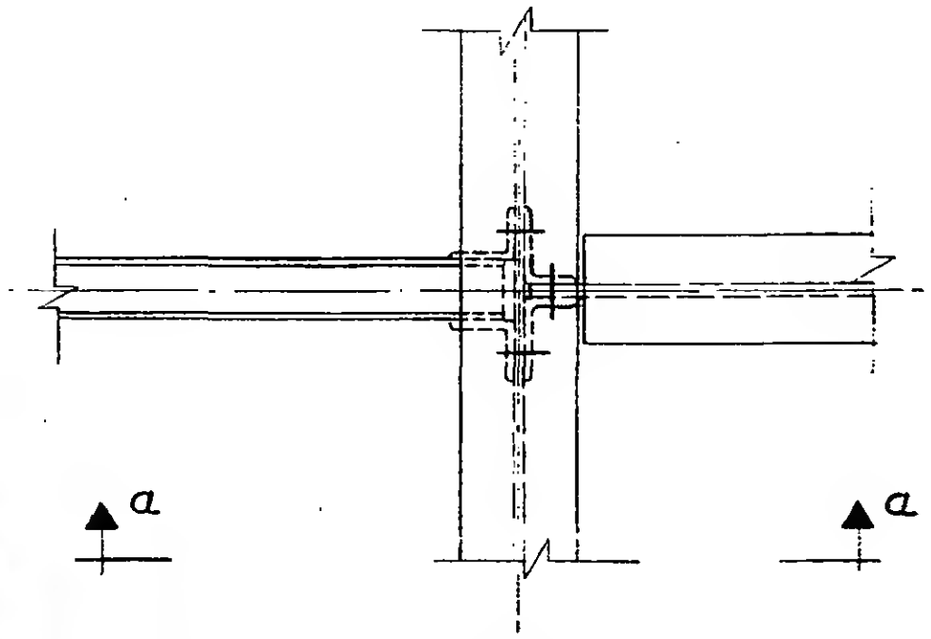

Plan

SCHEDULE		
	174 A	174 B
ANGLES		
P	4 x 3½ x 3/8	4 x 3½ x 3/8
Q	6 x 3½ x 3/8	6 x 3½ x 3/8
BOLTS		
K	3 - 3/4" ϕ	3 - 3/4" ϕ
L	—	3 - 3/4" ϕ
WELDS		
1	1/4	1/4

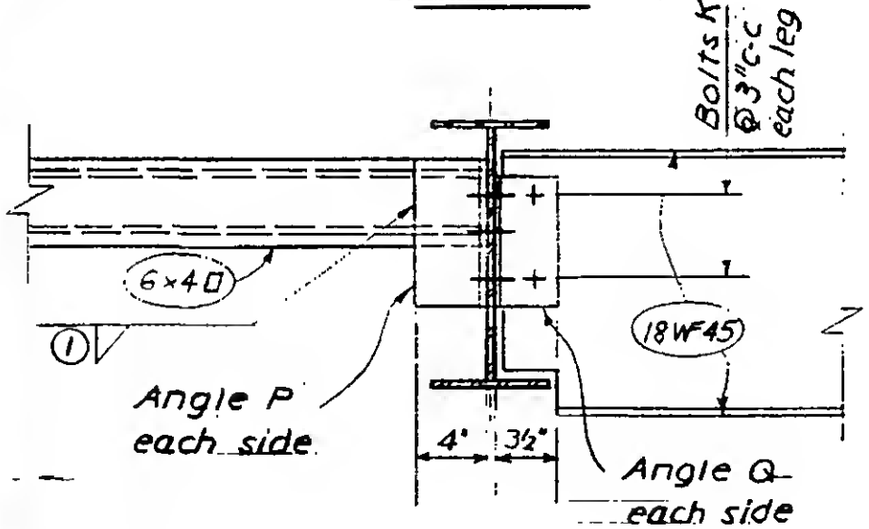

Section a-a
174 A

Modify detail 451 (for 6x4 tube) as shown when combined with detail 174 A or B

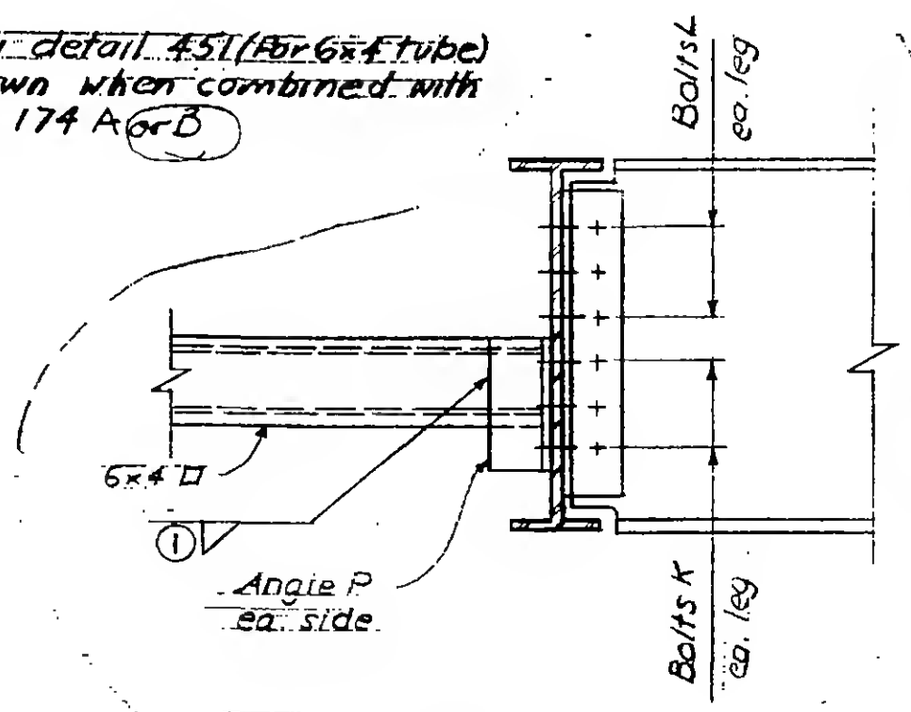

Section a-a
174 B



6-AB2-76