WORTHINGTON, SKILLING, HELLE & JACKSON — Civil & Structural Engineers

PROJECT THE WORLD TRADE CENTER | TITLE CONNECTION DETAIL 175 A | DATE 7-28-67

REVISIONS

8-5-67

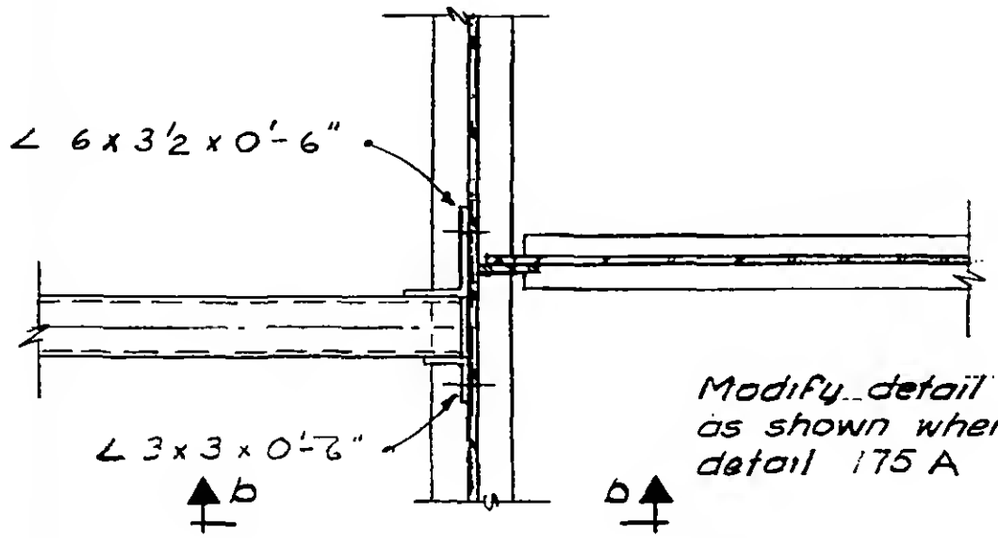

Modify detail 451 (For 6x4 tube) as shown when combined with detail 175 A

Plan a-a

BEAM 'B'	Bolts K
8B	2-⅞"ϕ A325
12B	3-⅞"ϕ A325

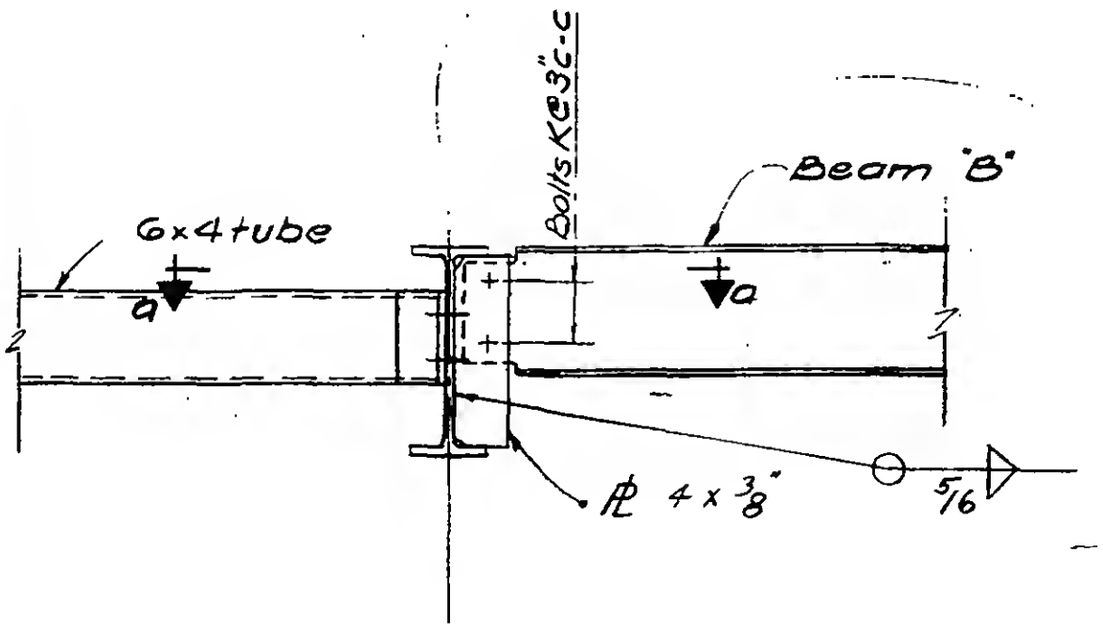

Section b-b

LESLIE E. ROBERTSON
LICENSED PROFESSIONAL ENGINEER
No. 34360
STATE OF NEW YORK

6-AB2-77