WORTHINGTON, SKILLING, HELLE & JACKSON — Civil & Structural Engineers

PROJECT: THE WORLD TRADE CENTER | TITLE: CONNECTION DETAIL 176:A | DATE: 6-5-67

REVISIONS

0-2-67

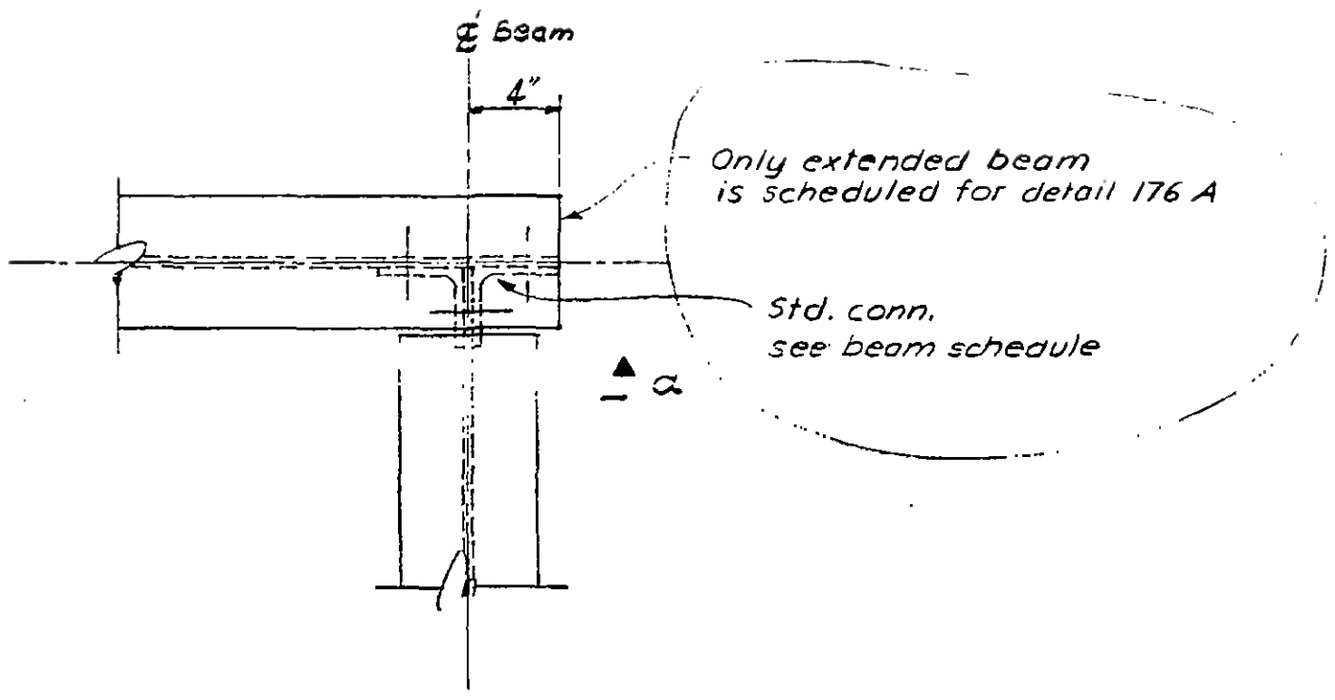

PLAN

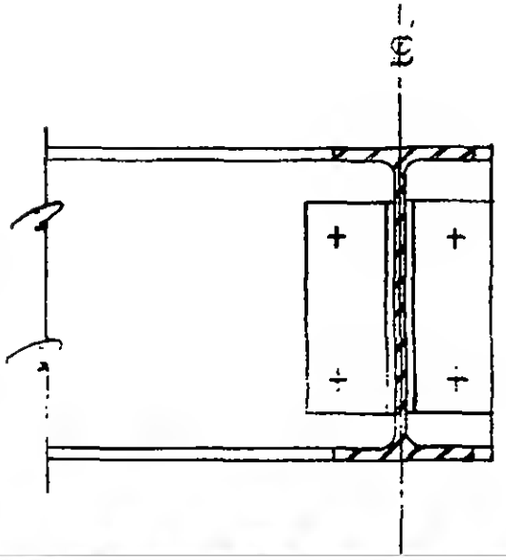

Section a-a

LESLIE E. ROBERTSON

6-AB2-78