WORTHINGTON, SKILLING, HELLE & JACKSON — Civil & Structural Engineers

PROJECT THE WORLD TRADE CENTER | TITLE SPLICE DETAILS 401A,B,C, 402A 405 406, 414A,B, 430A,B,C | DATE 8-5-67

REVISIONS

9-18-68

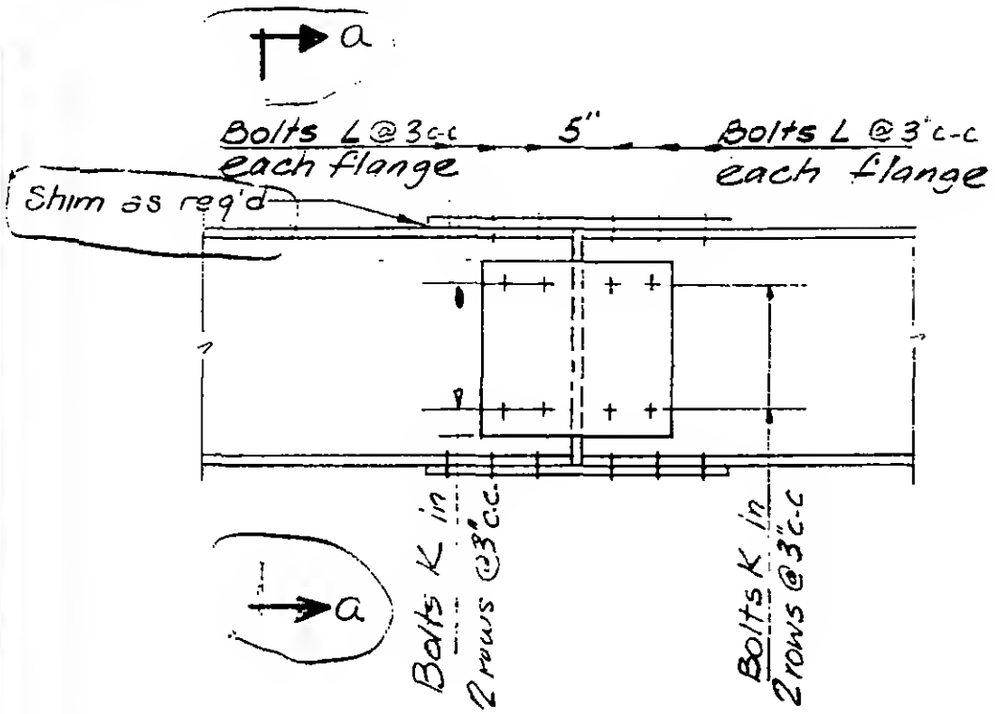

Detail	Bolts K	Bolts L	℄P	℄Q
401A,B	6-⅞"ϕ	6-⅞"ϕ	½	½
402 A	6-⅞"ϕ	6-⅞"ϕ	½	½
405	6-⅞"ϕ	6-⅞"ϕ	½	½
406	4-¾"ϕ	4-¾"ϕ	⅜	½
414 A,B	8-1"ϕ	6-1"ϕ	⅜	½
401 C	6-1⅛"ϕ	8-1⅛"ϕ	½	¾
430A	14-⅞"ϕ	6-1⅛"ϕ	½	⅝
408 A	8-1"ϕ	6-1"ϕ	⅜	½
430B	16-⅞"ϕ	8-1⅛"ϕ	½	⅞
430C	16-⅞"ϕ	8-1⅛"ϕ	½	⅞"

408A

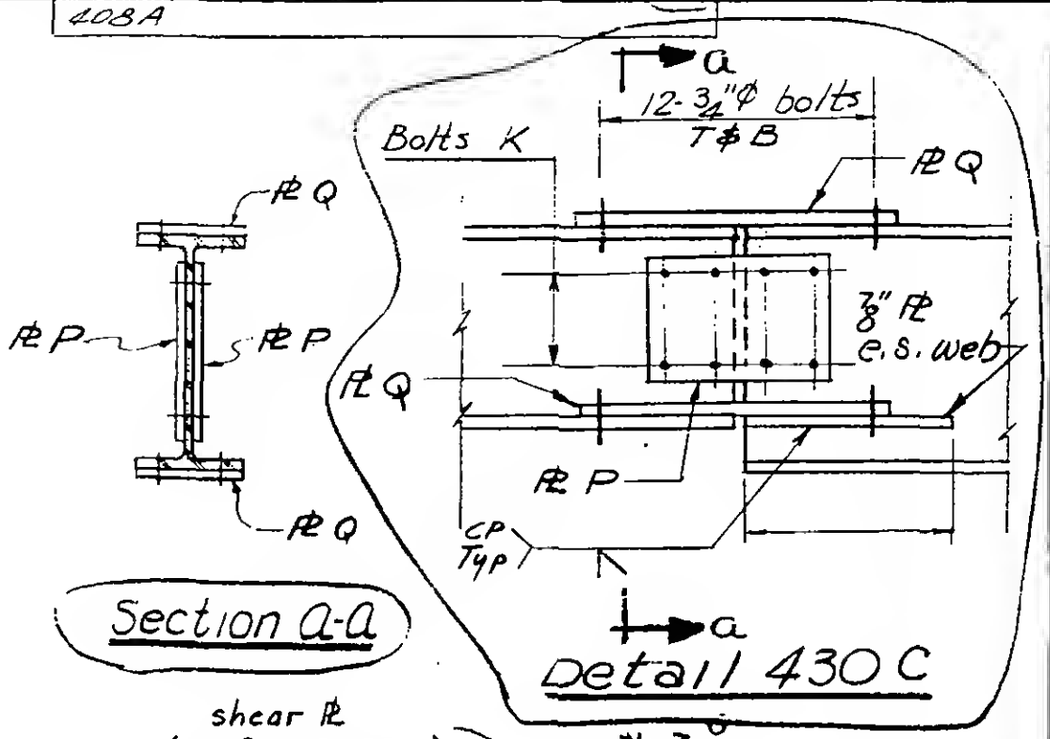

Section a-a

Detail 430C

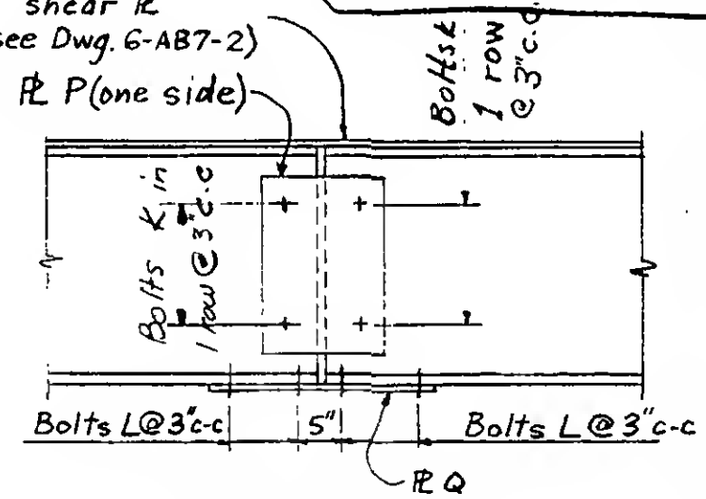

Detail 406 (only)

LICENSED PROFESSIONAL ENGINEER LESLIE E. ROBERTSON No. 34360 UNIVERSITY OF THE STATE OF NEW YORK

6-AB2-81