WORTHINGTON, SKILLING, HELLE & JACKSON — Civil & Structural Engineers

PROJECT THE WORLD TRADE CENTER | TITLE SPLICE DETAILS 403A, 404A, 409A,B,C,D | DATE 8-5-67

REVISIONS

-2-67

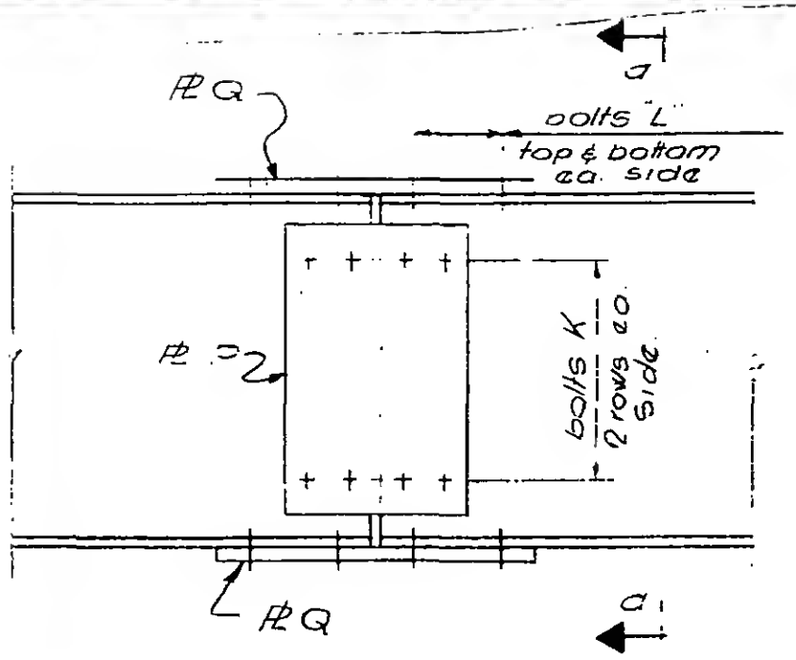

Elevation

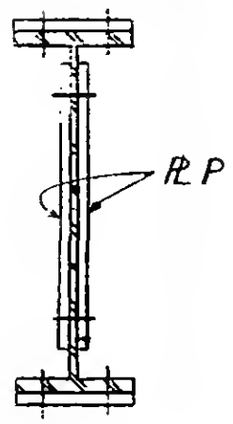

Section a-a

Detail	bolts K	bolts L	PL P	PL Q
403 A	12-1"ϕ	—	1/2"	—
409 A	12-1"ϕ	—	1/2"	—
409 B	12-1"ϕ	6-7/8"ϕ	5/8"	1/2
409 C	12-7/8"ϕ	—	1/2"	—
409 D	12-3/4"ϕ	—	1/2"	—

403 A & 409 A, B, C, D

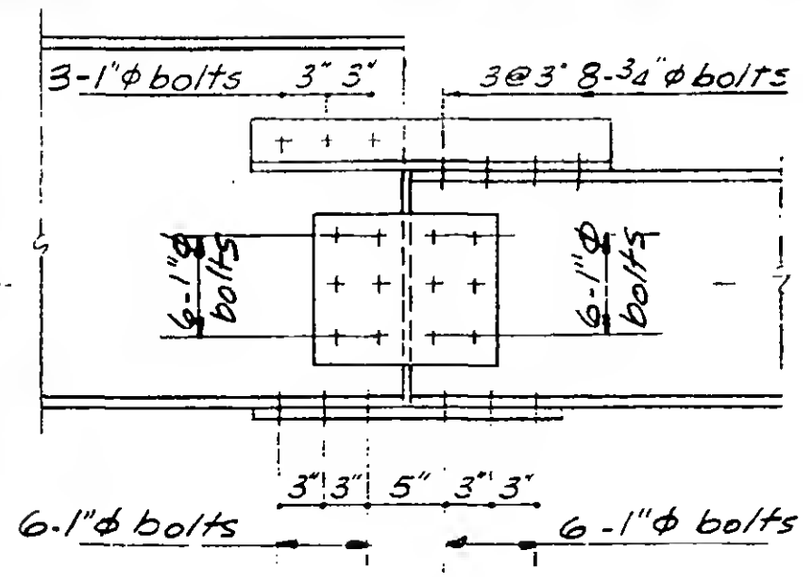

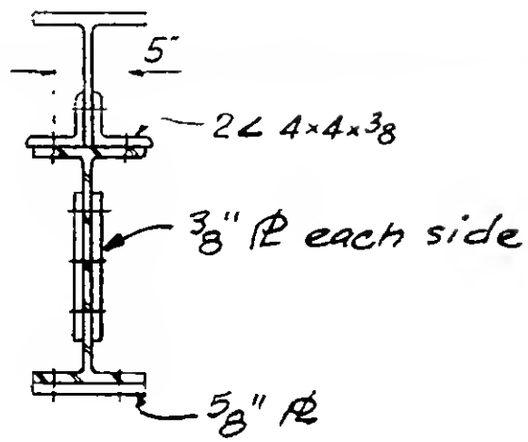

404A

LICENSED PROFESSIONAL ENGINEER
LESLIE E. ROBERTSON
No. 34360
STATE OF THE STATE OF NEW YORK

6-AB2-82