SKILLING - HELLE - CHRISTIANSEN - ROBERTSON Structural & Civil Engineers

PROJECT THE WORLD TRADE CENTER | TITLE SPLICE DETAIL 411B/410B | DATE 1-24-68

REVISIONS

7-17-68

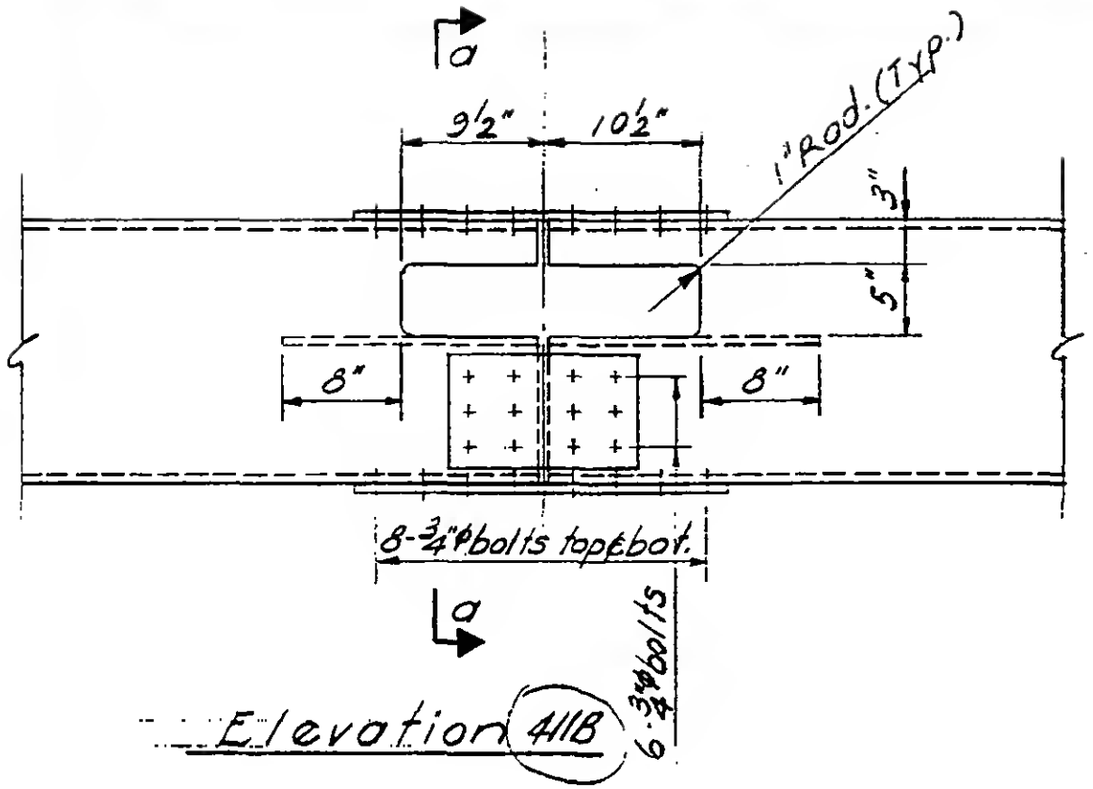

Elevation 411B

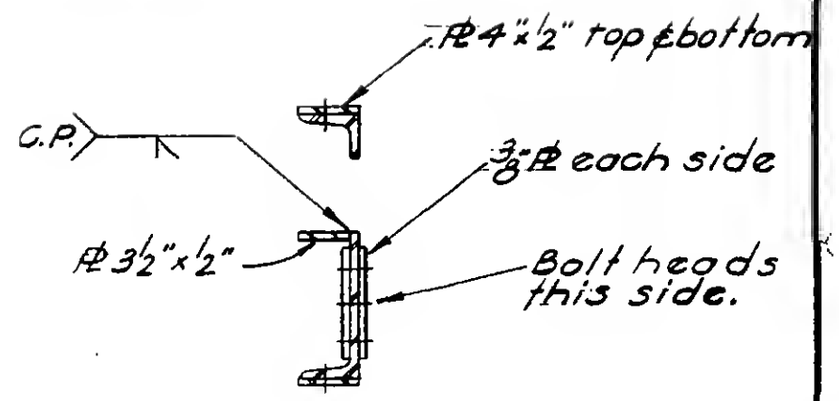

Section a-a

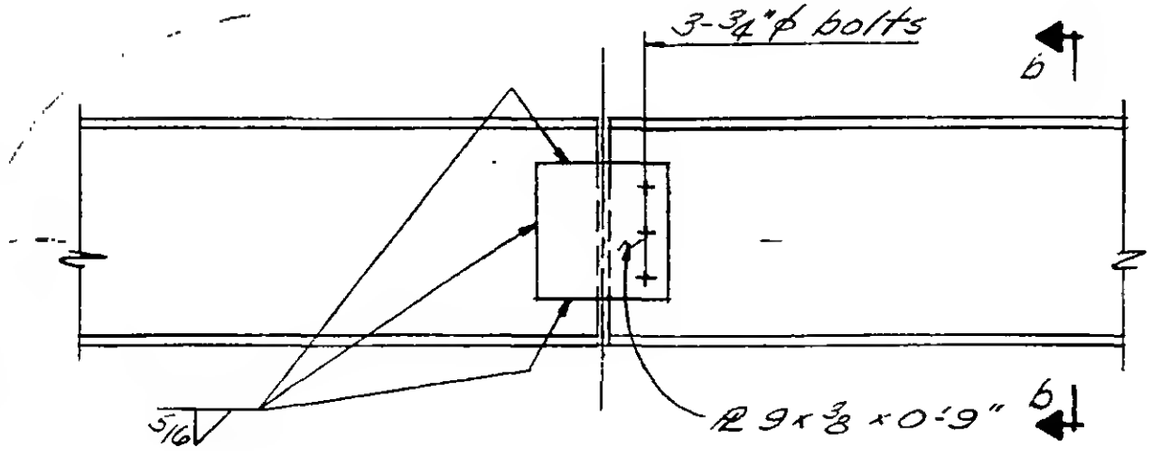

ELEVATION 410B



Section b-b

LICENSED PROFESSIONAL ENGINEER
LESLIE E. ROBERTSON
No. 34360
UNIVERSITY OF THE STATE OF NEW YORK

6-AB2-83.1