SKILLING - HELLE - CHRISTIANSEN - ROBERTSON  Structural & Civil Engineers

PROJECT THE WORLD TRADE CENTER | TITLE SPLICE DETAIL 433 A & B: | DATE 8-14-67

REVISIONS

2-2-67

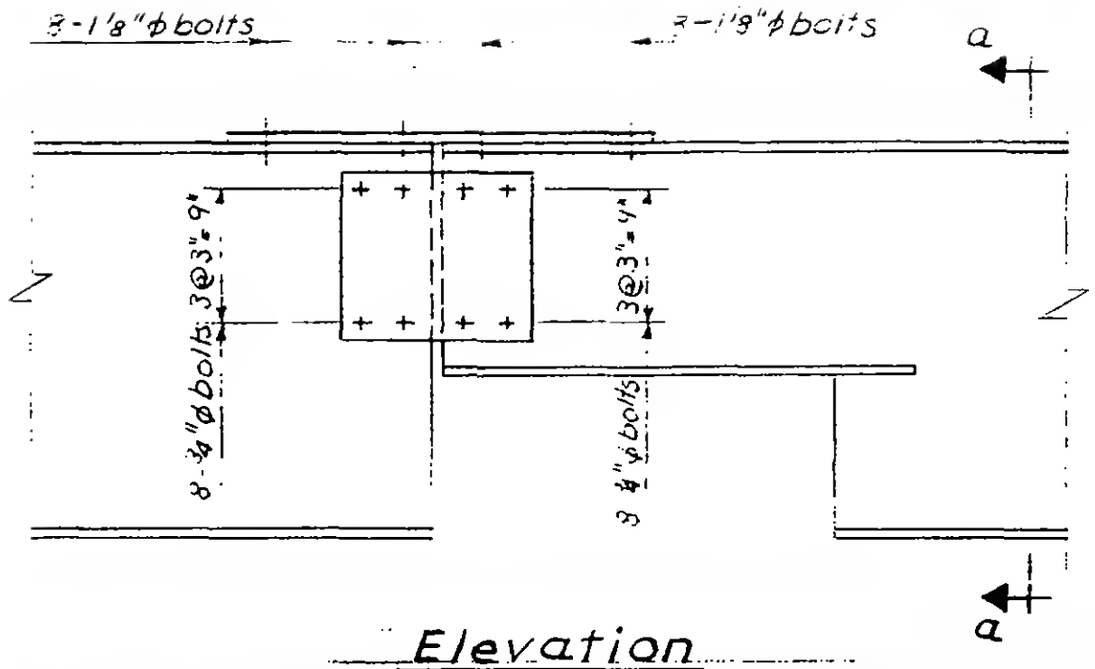


Elevation
Detail 433 A

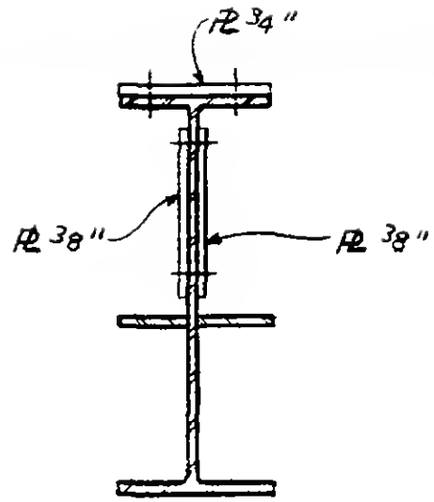


Section a-a

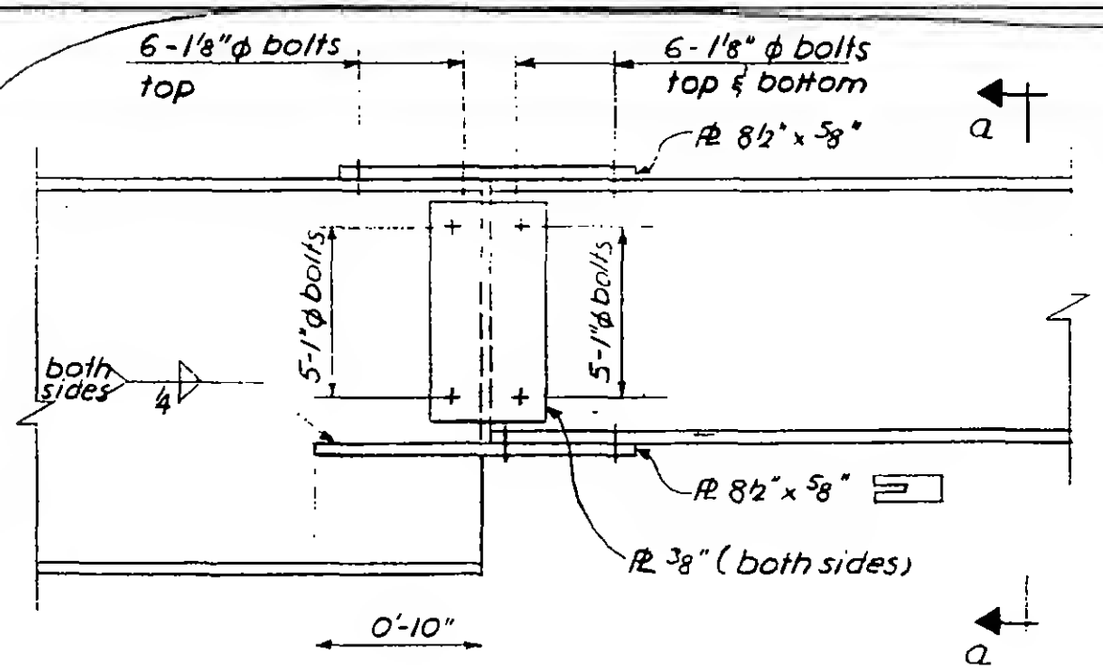


Elevation
Detail 433 B

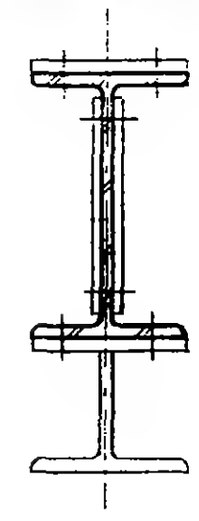

Section a-a

LICENSED PROFESSIONAL ENGINEER
LESLIE E. ROBERTSON
No. 34360
UNIVERSITY OF THE STATE OF NEW YORK

6-AB2-89