SKILLING - HELLE - CHRISTIANSEN - ROBERTSON Structural & Civil Engineers

PROJECT THE WORLD TRADE CENTER | TITLE SPLICE CONNECTION DETAIL 440B, 441B | DATE 11-17-67

REVISIONS

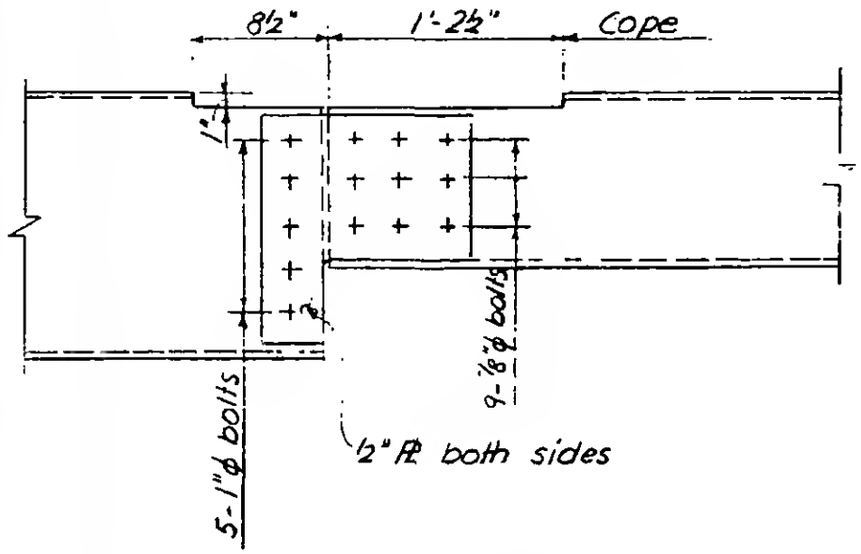

Detail 440B

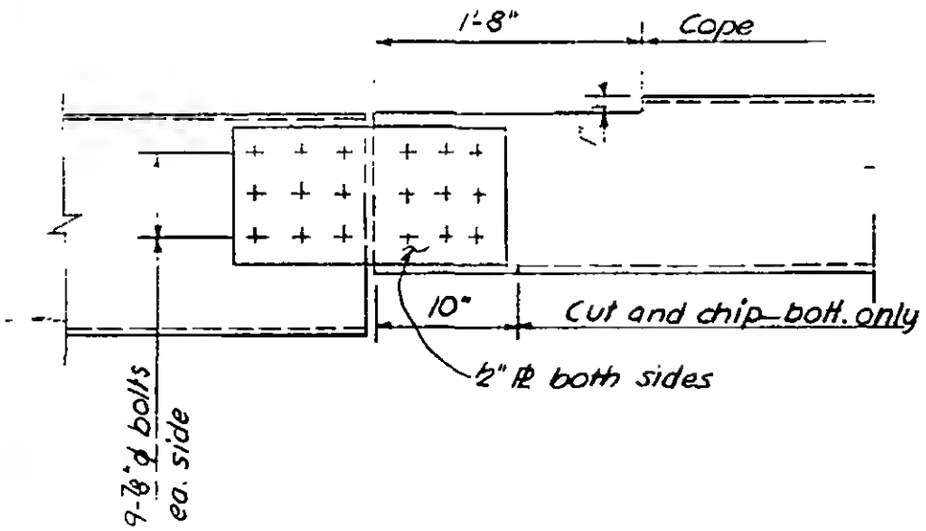

Detail 441B

LICENSED PROFESSIONAL ENGINEER
LESLIE E. ROBERTSON
No. 34560
UNIVERSITY OF THE STATE OF NEW YORK

6-AB2-91.1