WORTHINGTON, SKILLING, HELLE & JACKSON — Civil & Structural Engineers

PROJECT: THE WORLD TRADE CENTER | TITLE: CONNECTION DETAIL 451, 451A | DATE: 5-1-67

REVISIONS

6-19-67

8-5-67

1-10-69

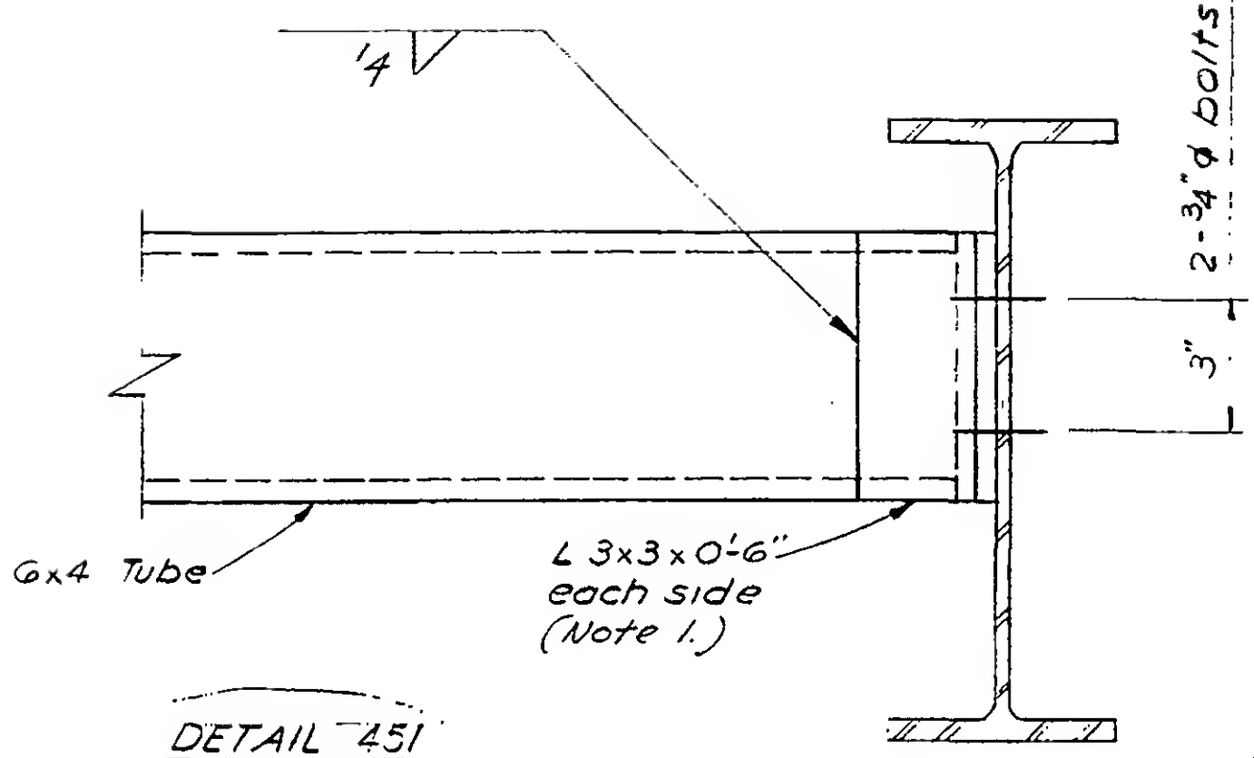

DETAIL 451

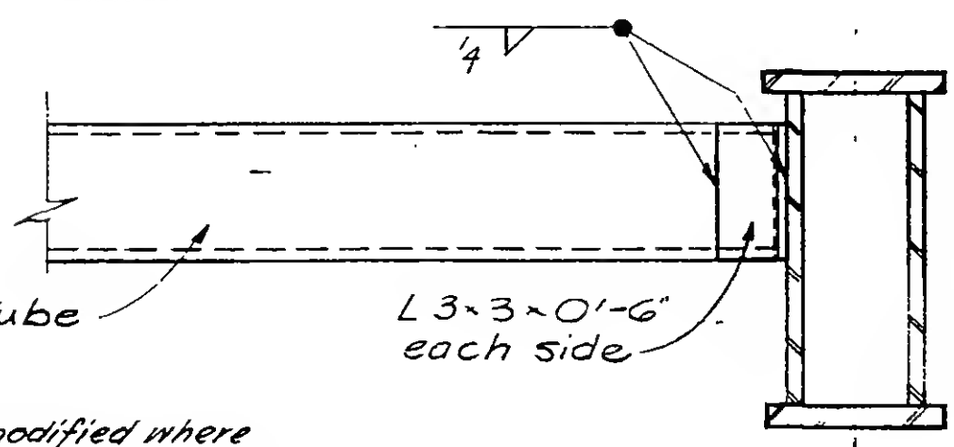

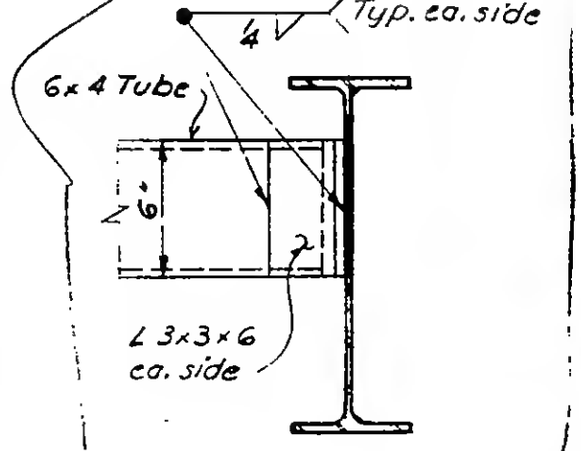

DETAIL 451A

Note 1. These angles modified where details 174 & 175 are scheduled for far side of beam. (See 6-AB2-76 & 77)

DETAIL 451

LICENSED PROFESSIONAL ENGINEER — LESLIE E. ROBERTSON — No. 34360 — STATE OF NEW YORK

6-AB2-102