WORTHINGTON, SKILLING, HELLE & JACKSON — Civil & Structural Engineers

PROJECT	TITLE	DATE
THE WORLD TRADE CENTER	CONNECTION DETAIL 452 A, B, C	5-9-67

REVISIONS

- 9-2-67
- 10-31-67
- 3-11-68
- 5-7-68

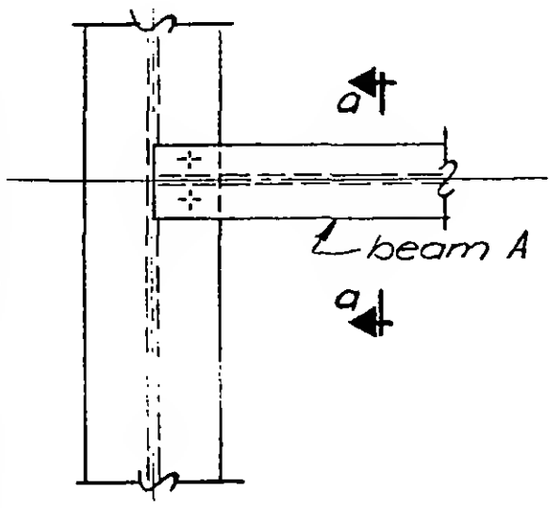

PLAN

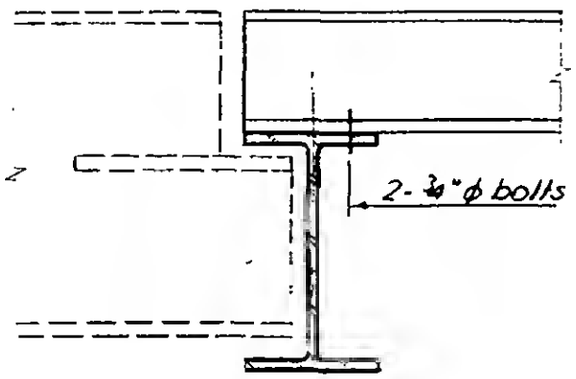

452 B only

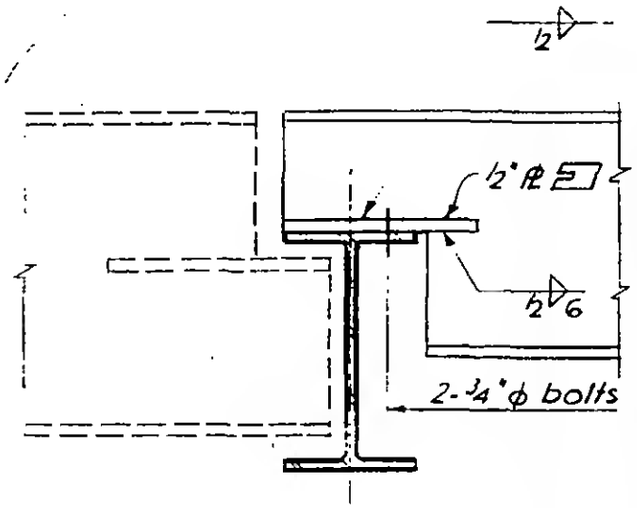

452 C

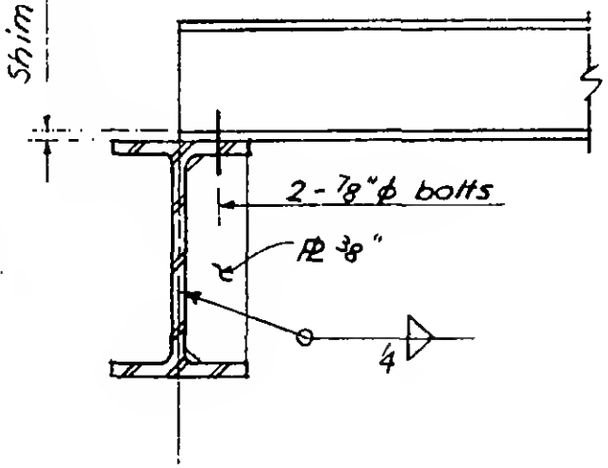

Section a-a beam A-16 WF

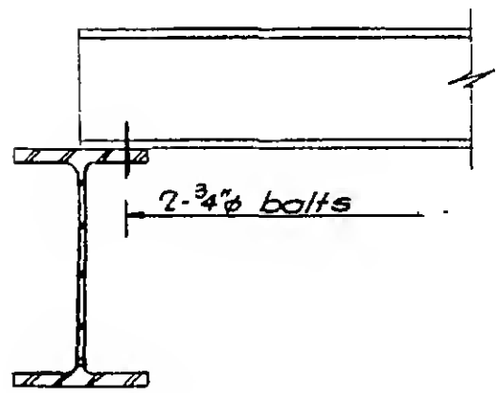

Section a-a beam A-8B

PROFESSIONAL ENGINEER
E. ROBERTSON
N.Y. 34360
STATE OF NEW YORK

G-AB2-103