WORTHINGTON, SKILLING, HELLE & JACKSON — Civil & Structural Engineers

PROJECT: THE WORLD TRADE CENTER | TITLE: CONNECTION DETAIL 453A C | DATE: 6-5-67

REVISIONS
- 9-5-67
- 10-2-67

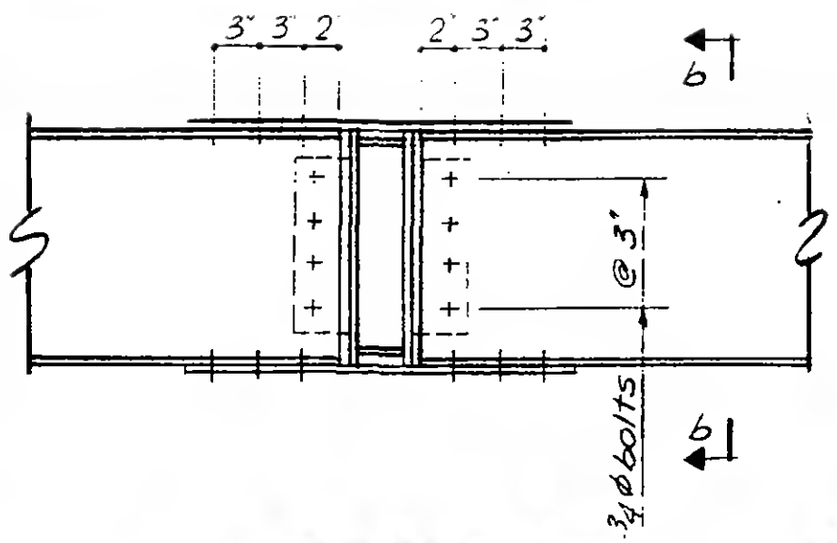

Section a-a

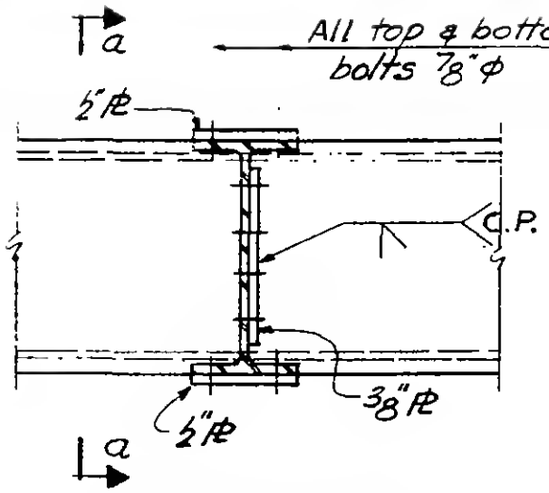

Section b-b

453 A

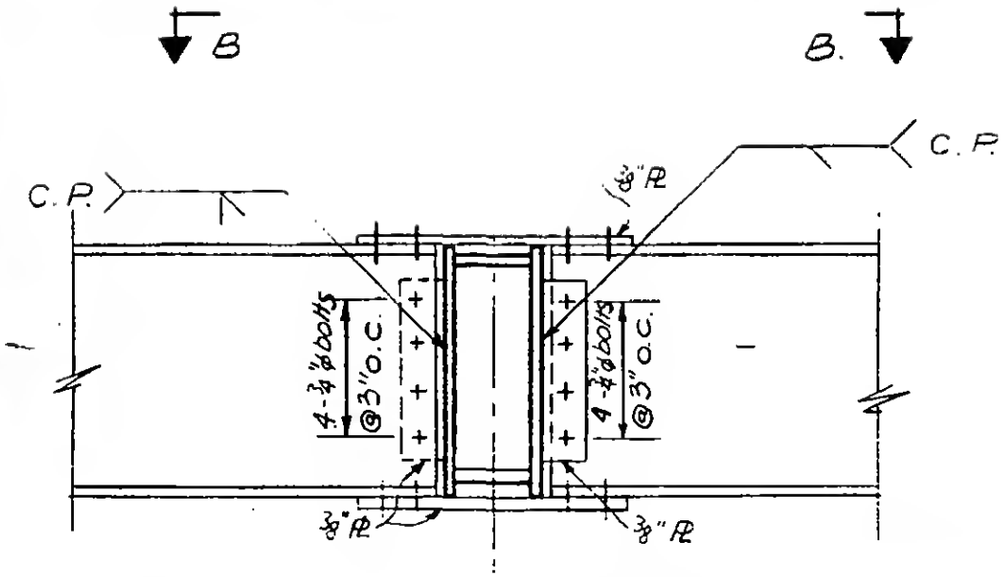

Section A-A

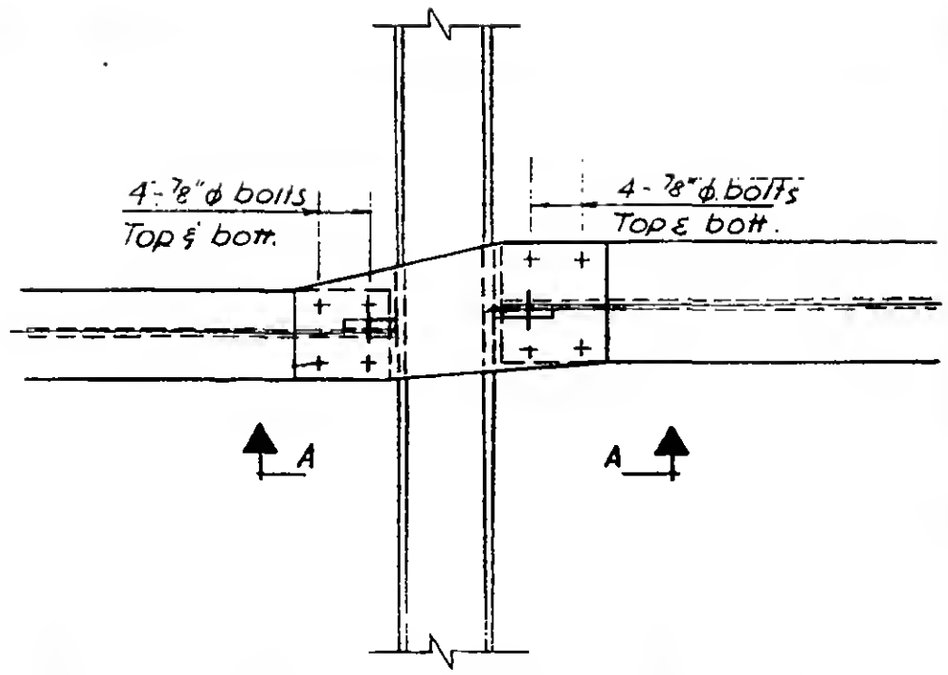

Section B-B

453 C

LICENSED PROFESSIONAL ENGINEER
LESLIE E. ROBERTSON
No. 34360
UNIVERSITY OF THE STATE OF NEW YORK

6-AB2-104