WORTHINGTON, SKILLING, HELLE & JACKSON — Civil & Structural Engineers

PROJECT: THE WORLD TRADE CENTER | TITLE: CONNECTION DETAIL 454 A, B, C | DATE: 6-5-67

REVISIONS
10-2-67
12-21-67
1-24-68

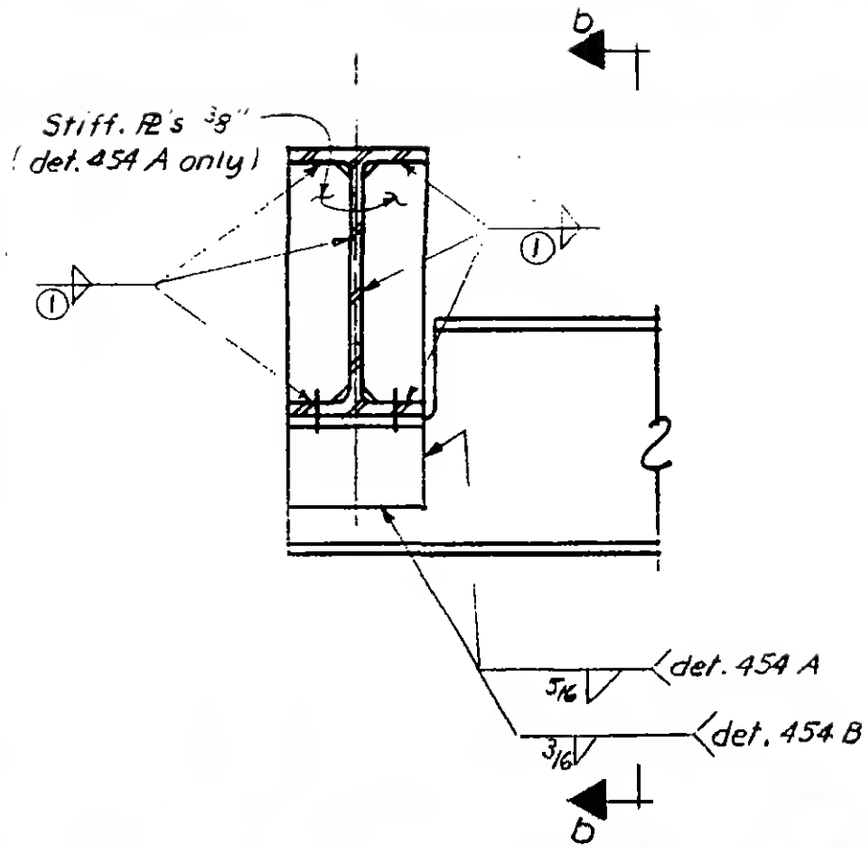

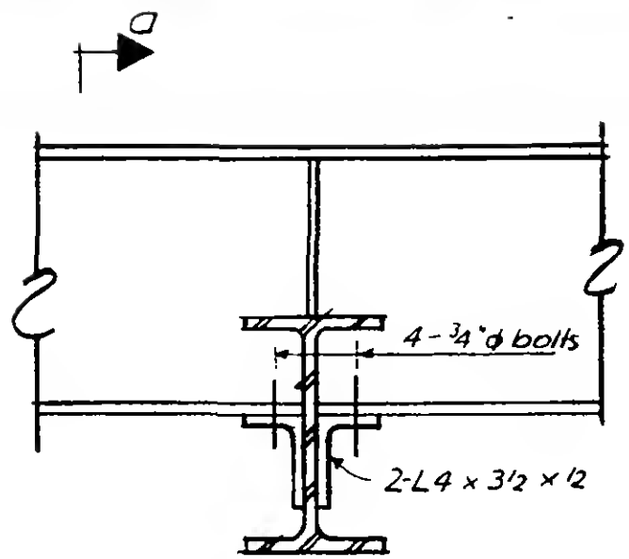

Section a-a — 454 A & B — Section b-b

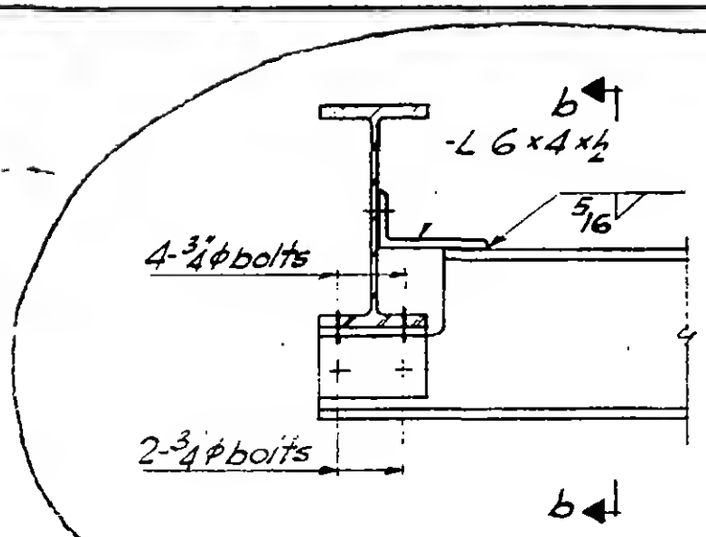

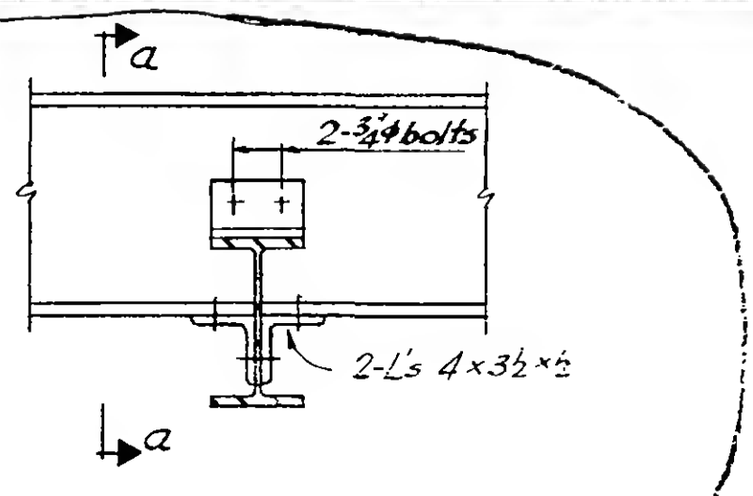

Section a-a — 454 C — Section b-b

LICENSED PROFESSIONAL ENGINEER — LESLIE E. ROBERTSON — No. 34360 — UNIVERSITY OF THE STATE OF NEW YORK

6-AB2-105