SKILLING - HELLE - CHRISTIANSEN - ROBERTSON Structural & Civil Engineers

PROJECT THE WORLD TRADE CENTER | TITLE CONNECTION DETAIL 456 C.D.E | DATE 11-17-67

REVISIONS

12-4-67

10-9-68

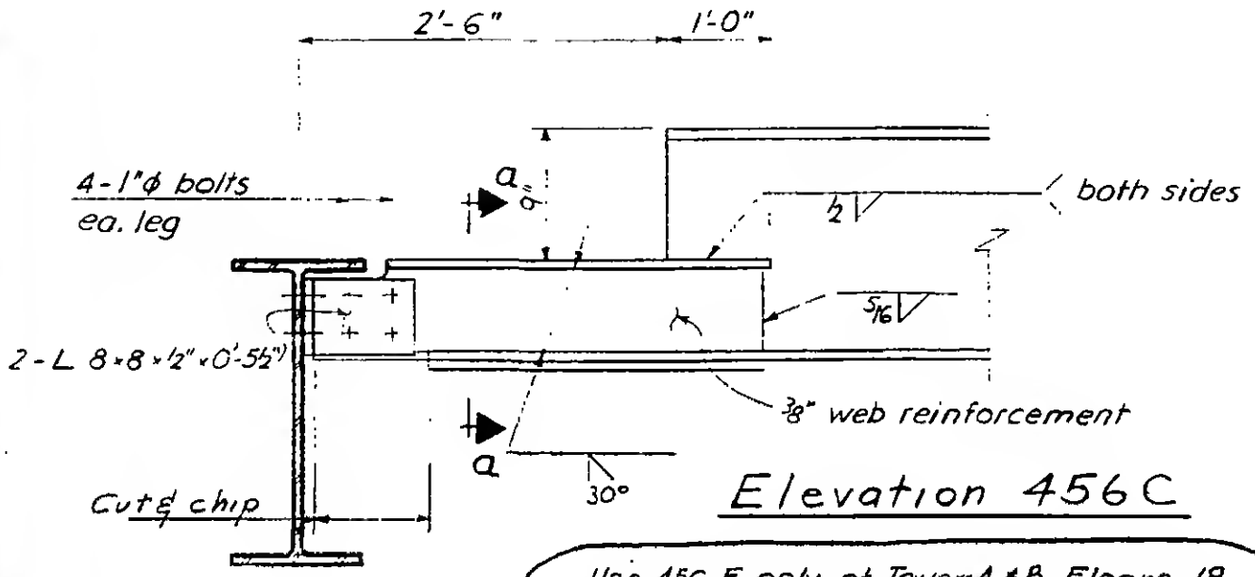

Elevation 456C

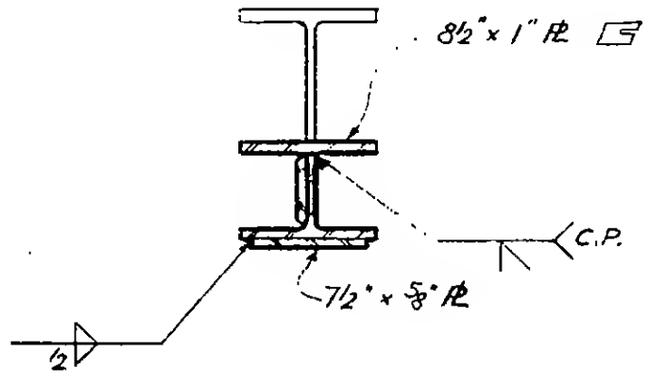

Section a-a

Use 456 E only of Towers A & B, Floors 18, 26, 34, and Tower A floor 56. Plates marked (*) are Revisions after Fabrication, fild installed. All others materials shop fabricated.

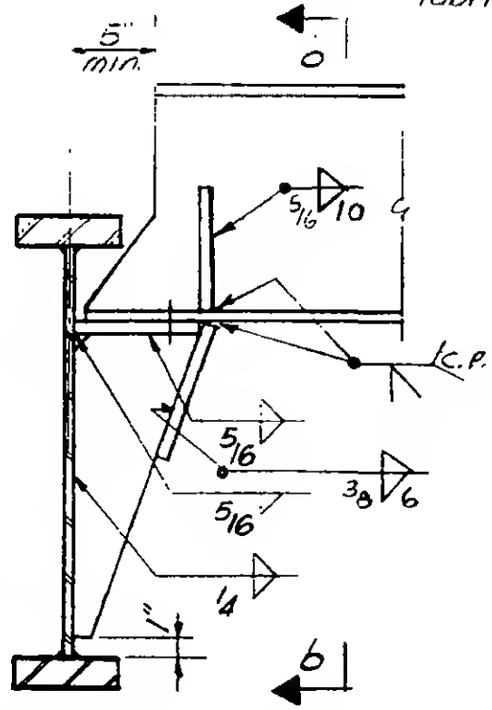

Elevation (456E)

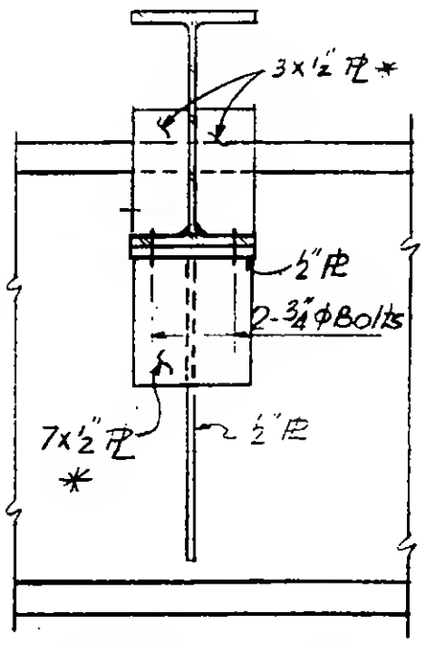

Section b-b

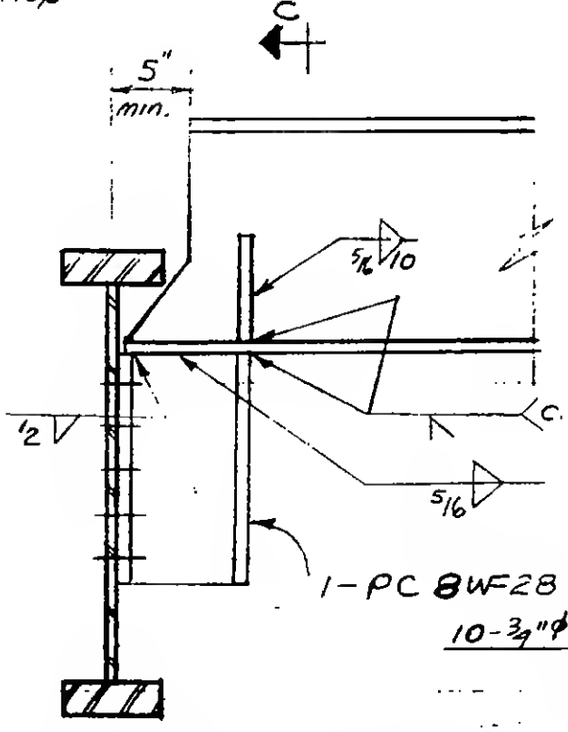

Elevation 456 D

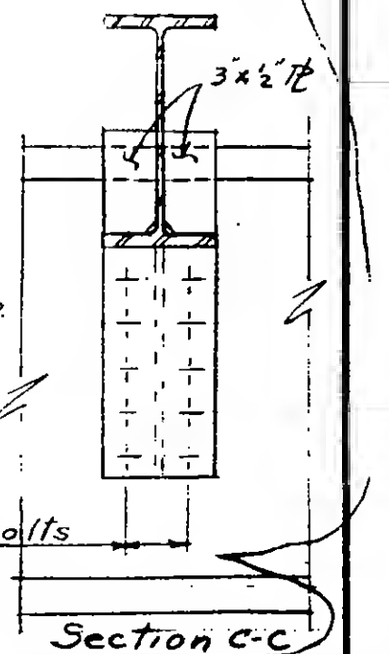

Section c-c

6-AB2-1071

LICENSED PROFESSIONAL ENGINEER
LESLIE E. ROBERTSON
No. [illegible]
UNIVERSITY OF THE STATE OF NEW YORK