SKILLING, HELLE, CHRISTIANSEN, ROBERTSON — Structural & Civil Engineers

PROJECT: THE WORLD TRADE CENTER | TITLE: DETAIL 45G L, M, N | DATE: 9-25-68

REVISIONS

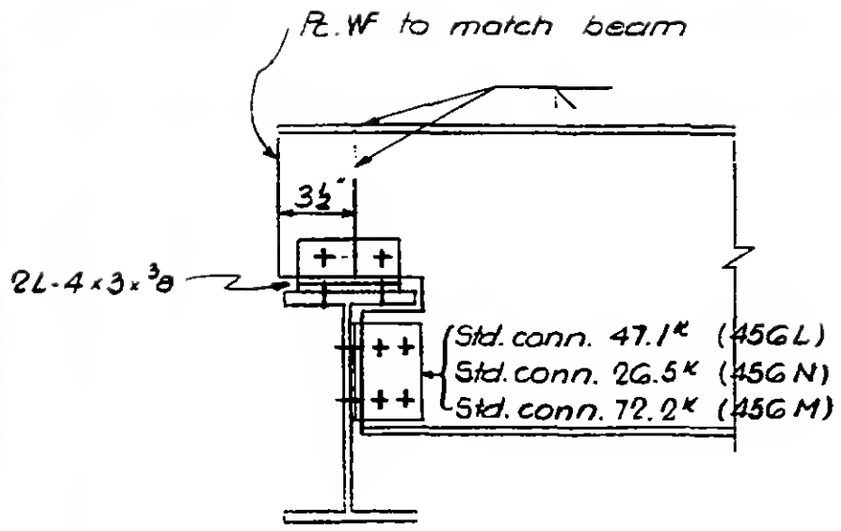

Detail 45G L, M, N



DESIGNED

DRAWN

G.T.H.

REVIEWED

G-AB2-107.4