WORTHINGTON, SKILLING, HELLE & JACKSON — Civil & Structural Engineers

PROJECT: THE WORLD TRADE CENTER | TITLE: CONNECTION DETAIL 457 A | DATE: 6-5-67

REVISIONS

8-14-67

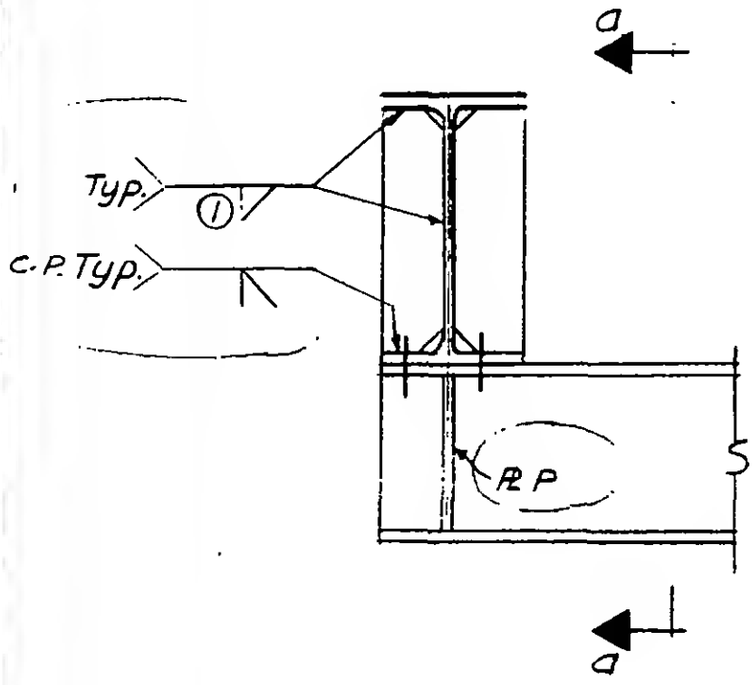

SCHEDULE	
PLATES	
P	3/8"
Q	3/8"
WELDS	
①	3/16
②	3/16

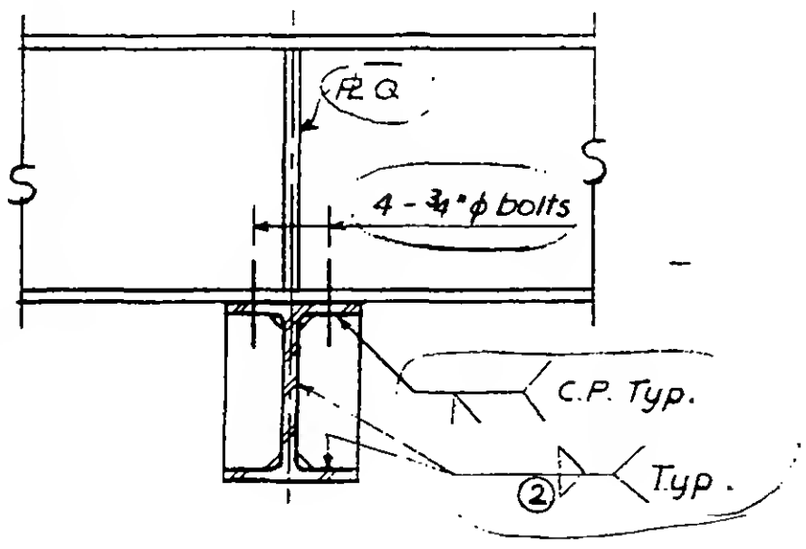

Section a-a

LICENSED PROFESSIONAL ENGINEER
LESLIE E. ROBERTSON
No. 34360
UNIVERSITY OF THE STATE OF NEW YORK

G-AB2-108