SKILLING - HELLE - CHRISTIANSEN - ROBERTSON Structural & Civil Engineers

PROJECT THE WORLD TRADE CENTER | TITLE CONNECTION DETAIL 458A,B | DATE 12-21-67

REVISIONS

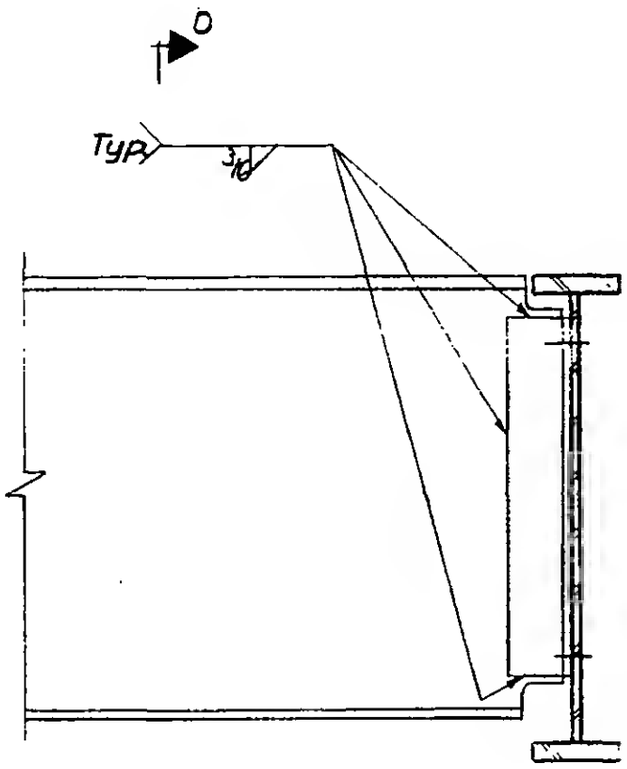

Section a-a

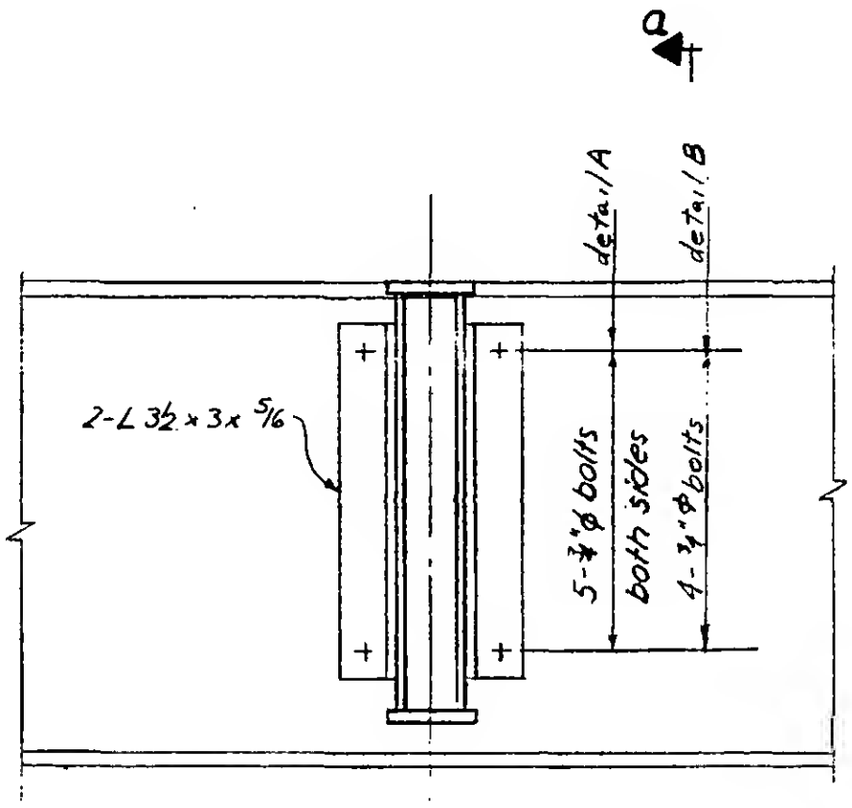

Section b-b

LICENSED PROFESSIONAL ENGINEER
LESLIE E. ROBERTSON
No. 34360
UNIVERSITY OF THE STATE OF NEW YORK

6-AB2-109