SKILLING - HELLE - CHRISTIANSEN - ROBERTSON Structural & Civil Engineers

PROJECT THE WORLD TRADE CENTER | TITLE CONNECTION DETAIL #63 A, B | DATE 3-14-67

REVISIONS

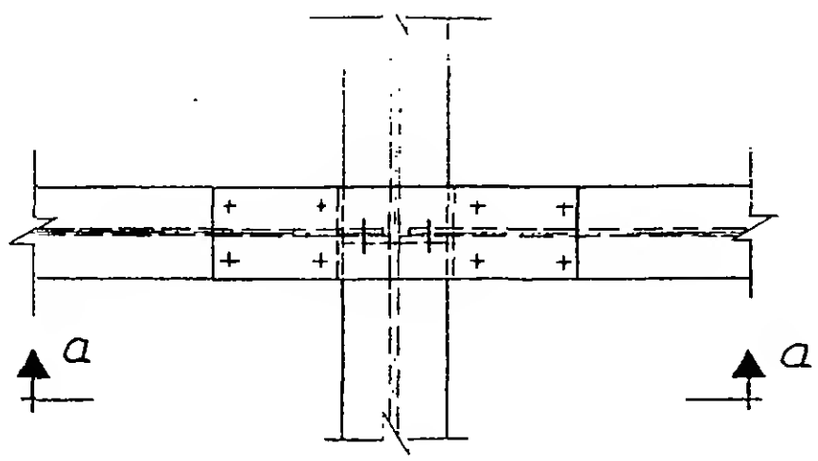

Plan

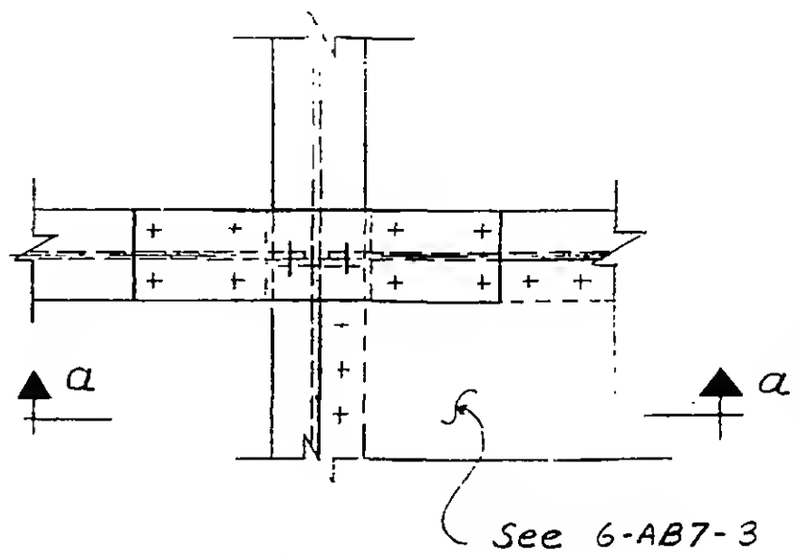

Plan

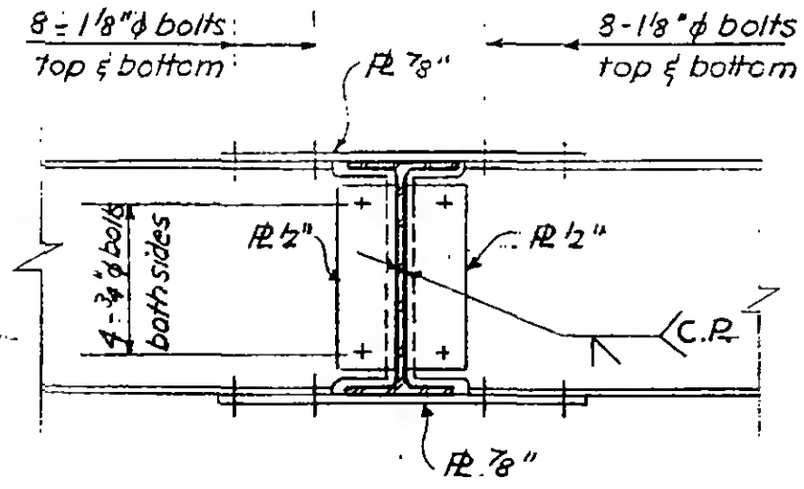

Section a-a

DETAIL 463 A

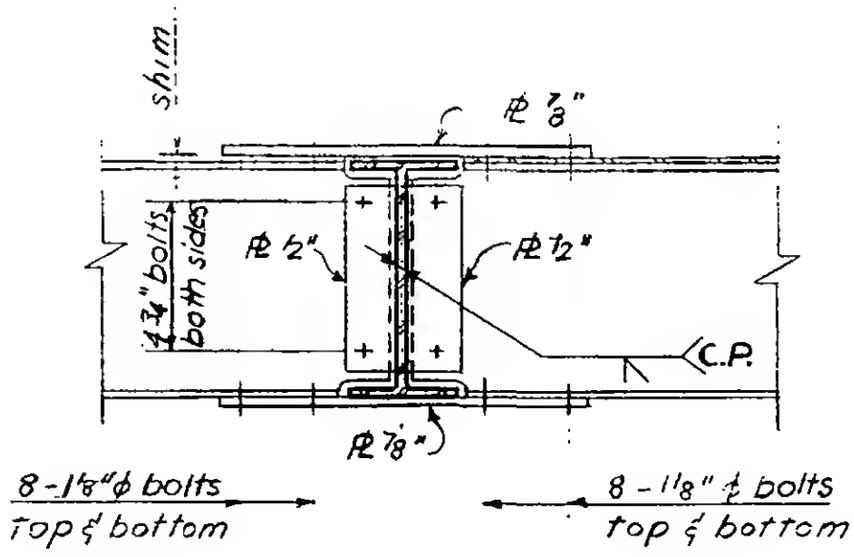

Section a-a

DETAIL 463 B

REGISTERED PROFESSIONAL ENGINEER
LESLIE E. ROBERTSON
No. 34360
STATE OF NEW YORK

6-AB2-114