SKILLING - HELLE - CHRISTIANSEN - ROBERTSON Structural & Civil Engineers

PROJECT THE WORLD TRADE CENTER | TITLE CONNECTION DETAIL 463 C, E & F | DATE 9-15-67

REVISIONS

11-10-67
1-24-68
2-9-68

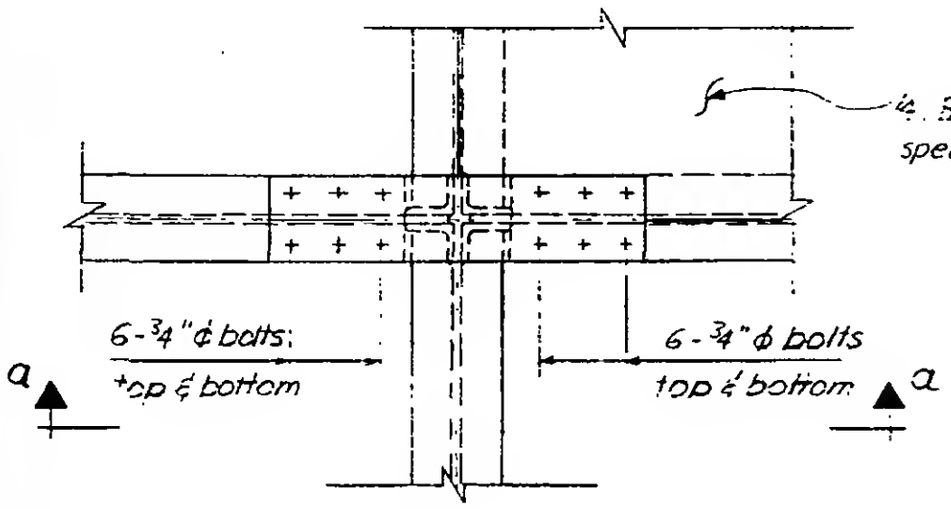

Plan
463 C & F

4. ℄ included in detail only if specified on framing plan

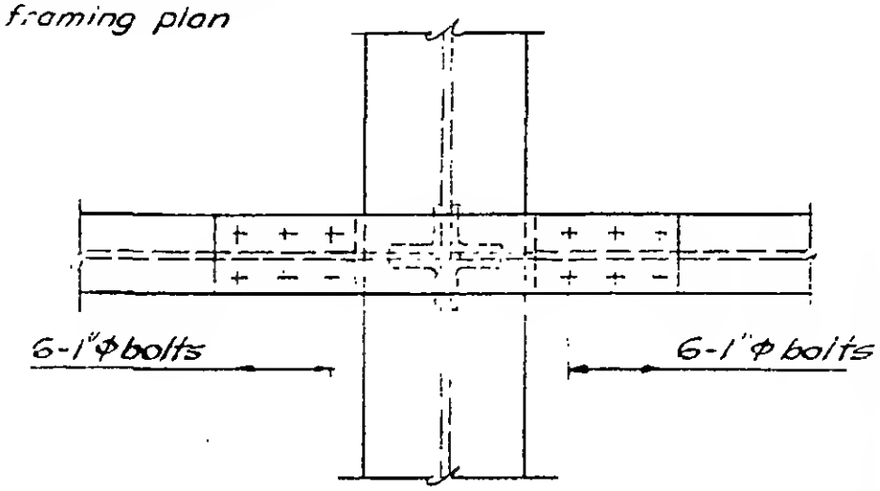

Plan
463 E

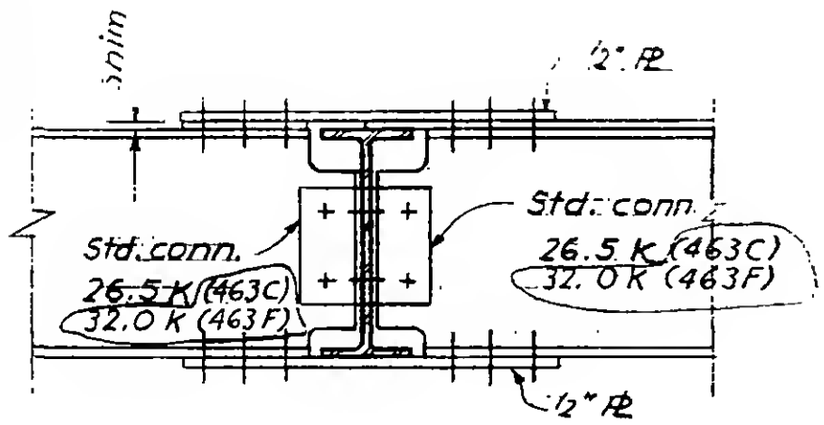

Section a-a

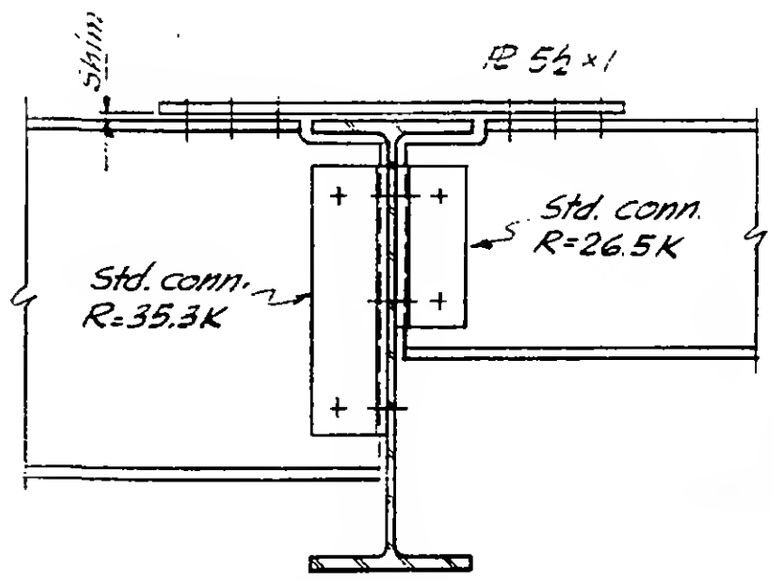

Section a-a

LICENSED PROFESSIONAL ENGINEER
LESLIE E. ROBERTSON
No. 34360
UNIVERSITY OF THE STATE OF NEW YORK

6-AB2-114.1