SKILLING - HELLE - CHRISTIANSEN - ROBERTSON Structural & Civil Engineers

PROJECT THE WORLD TRADE CENTER | TITLE CONNECTION DETAIL 465A | DATE 6-5-67

REVISIONS

11-23-67

10-24-68

11-22-68

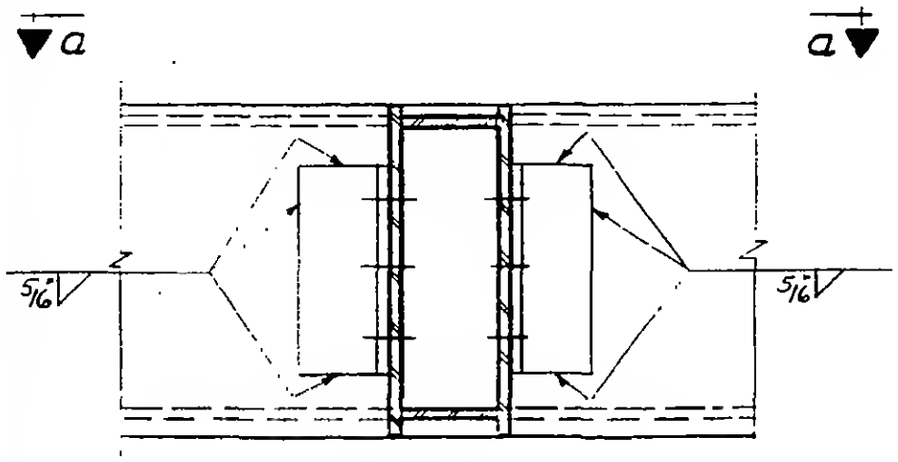

Elevation

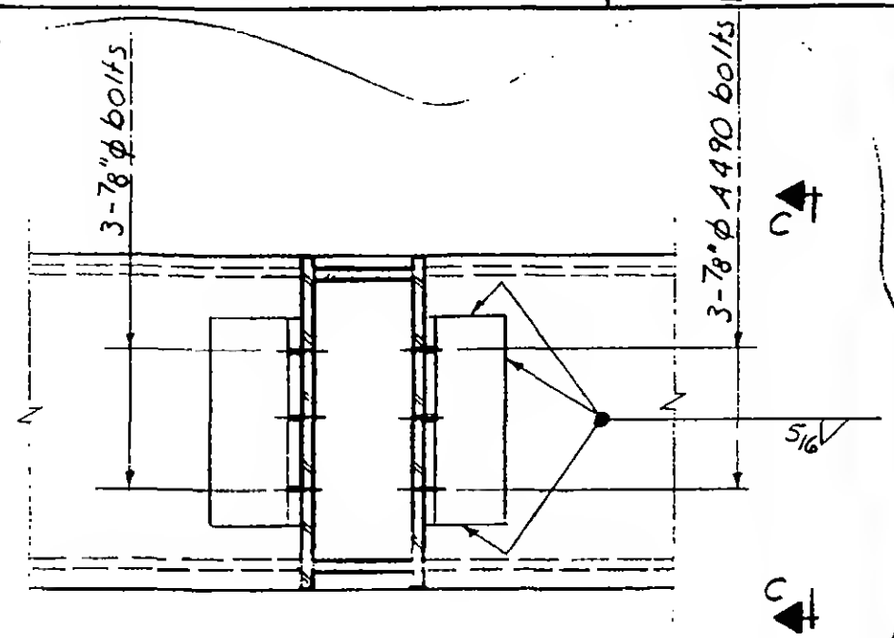

465A (Alternate)

Use where detail 450 is used as opposite end support

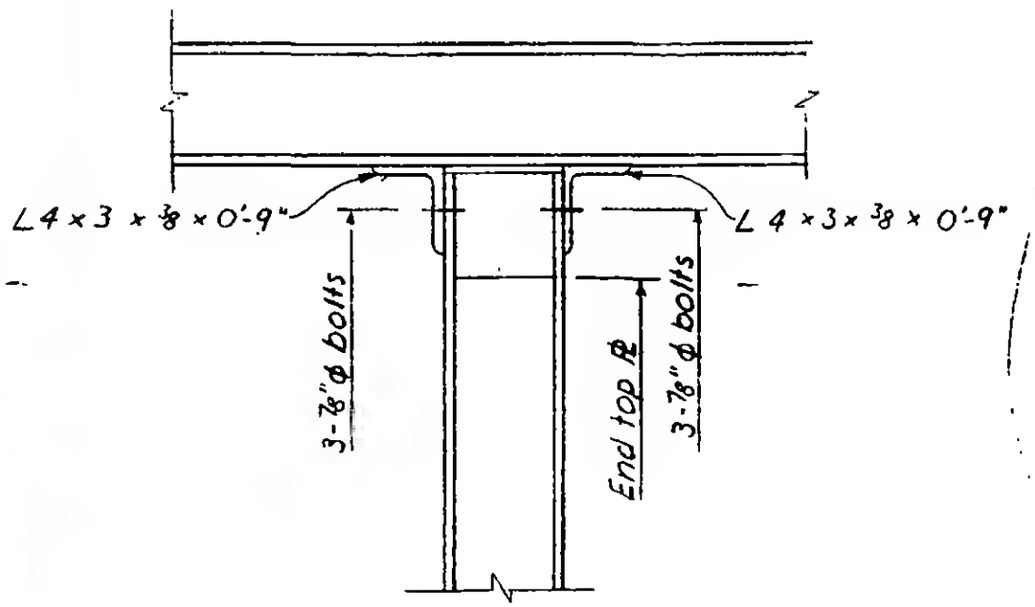

Section a-a

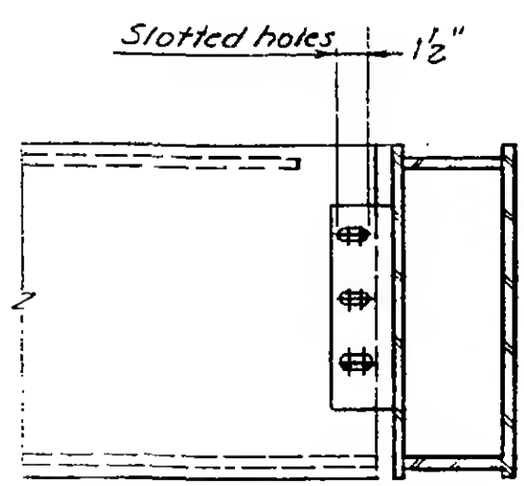

Section c-c (Alt.)

LESLIE E. ROBERTSON
No. 34960
OF THE STATE OF NEW YORK

6-AB2-116