WORTHINGTON, SKILLING, HELLE & JACKSON — Civil & Structural Engineers

PROJECT THE WORLD TRADE CENTER | TITLE CONNECTION DETAILS 471 A, B, C | DATE 6-5-67

REVISIONS

10-2-67

2-21-68

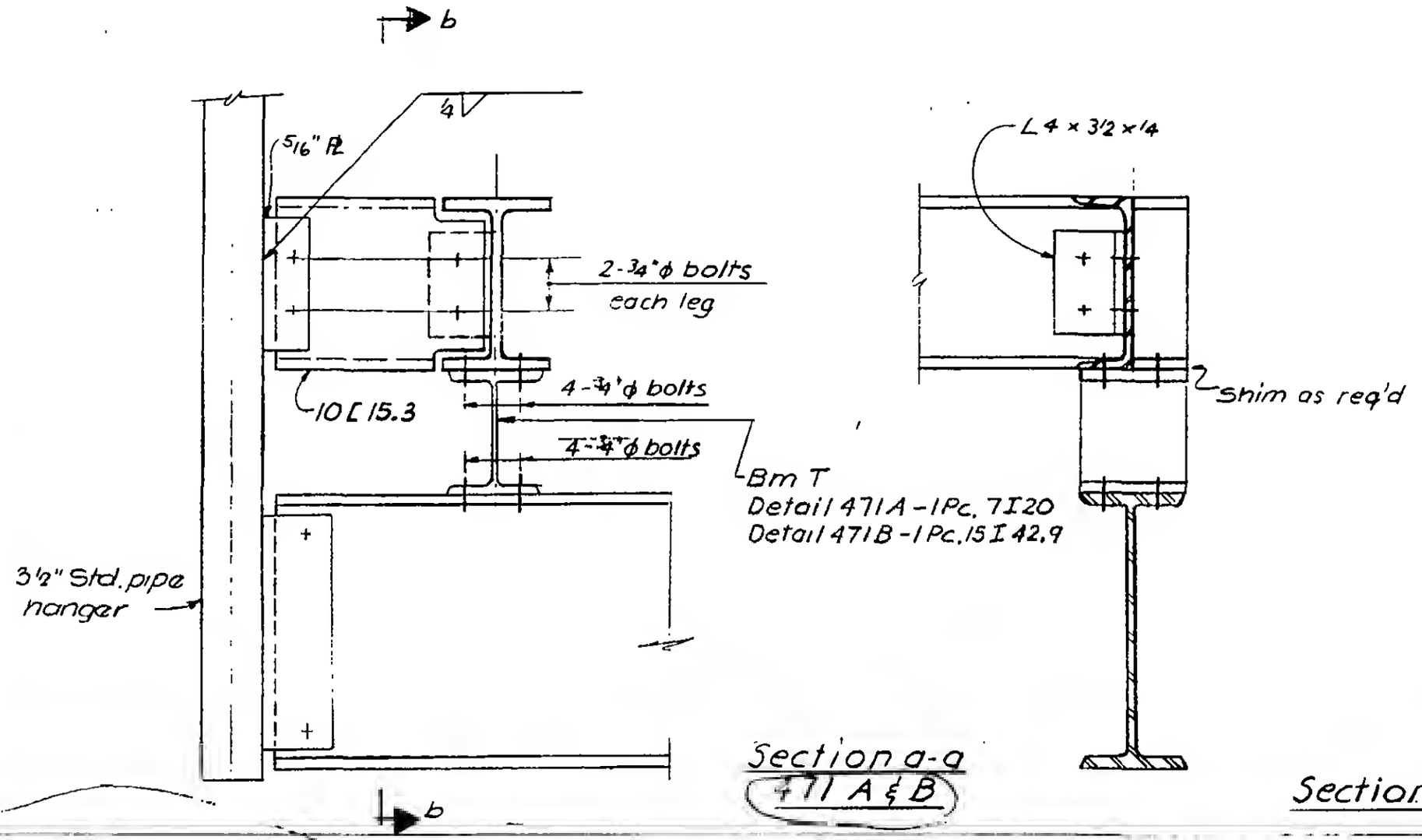

Section a-a
471 A & B

Section b-b

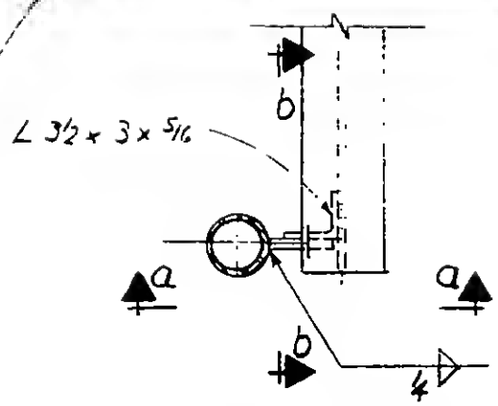

Plan 471C

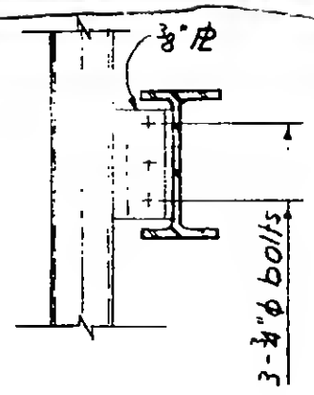

Section a-a

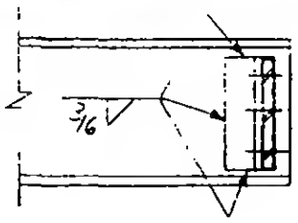

Section b-b

6-AB2-122

LICENSED PROFESSIONAL ENGINEER
LESLIE E. ROBERTSON
No. 34360
UNIVERSITY OF THE STATE OF NEW YORK