WORTHINGTON, SKILLING, HELLE & JACKSON — Civil & Structural Engineers,

PROJECT THE WORLD TRADE CENTER | TITLE CONNECTION DETAIL 472 A, B, C, D, E, F & G | DATE 8-5-67

REVISIONS

10-23-67
10-31-67

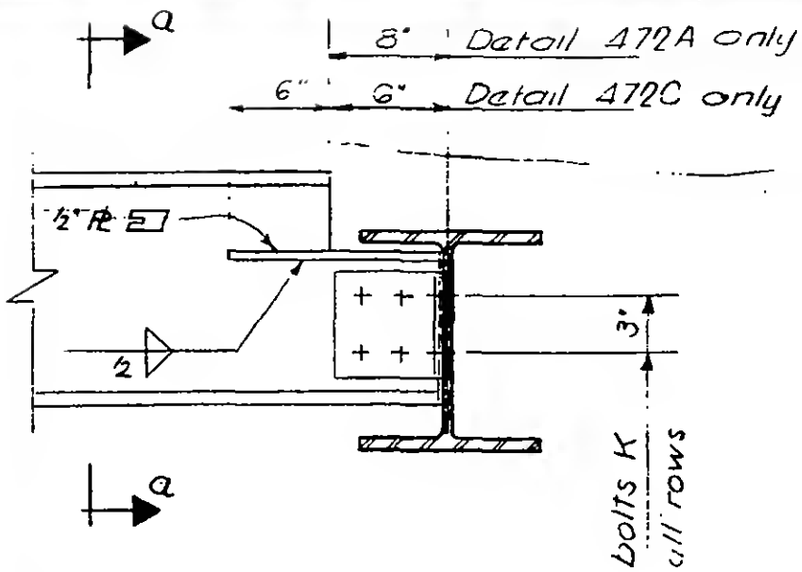

DETAIL A, B, C, D, E & G

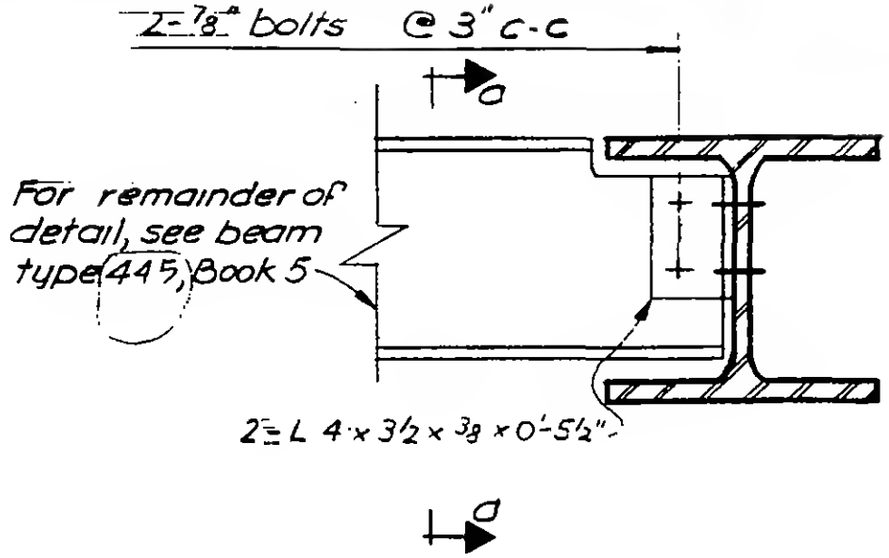

DETAIL 472 F

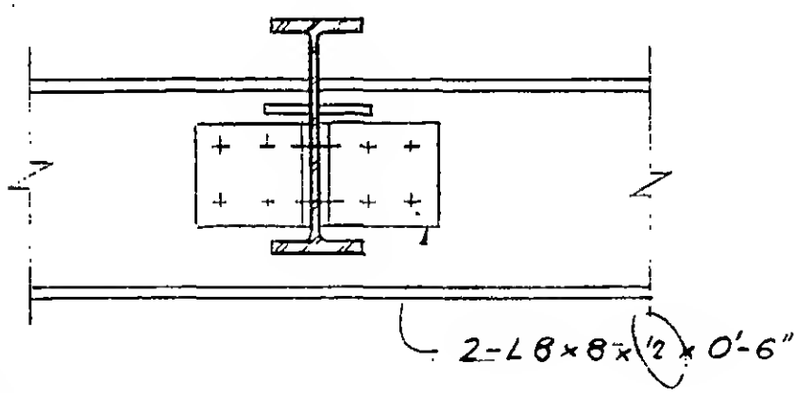

Section a-a

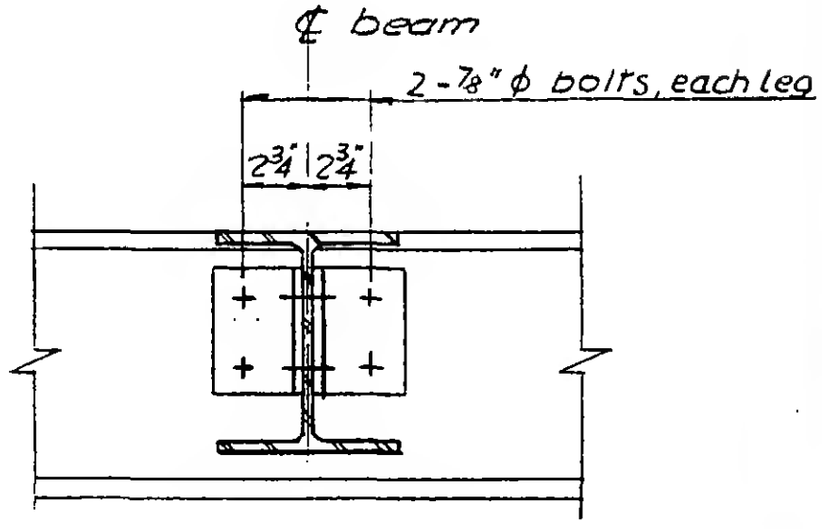

Section a-a

DETAIL A, B, C, D, E – bolts K - ⅞" ϕ bolts
DETAIL G – bolts K - 1" ϕ bolts

LICENSED PROFESSIONAL ENGINEER LESLIE E. ROBERTSON No. 34360 UNIVERSITY OF THE STATE OF NEW YORK

6-AB2-123